The Municipal Corporation of the Town of Fort Erie

Regular Council Meeting Agenda

Monday, February 22, 2021 - 6:00 PM

Council Chambers via Video Teleconference

Due to the COVID-19 Pandemic and the Closure of Town Hall
All electronic meetings can be viewed at:
Town's Website:
https://www.forterie.ca/pages/CouncilAgendasandMinutes
Town's YouTube Channel: www.youtube.com/townofforterie
or click on the YouTube icon on the home page of the Town's website (www.forterie.ca) or Cogeco TV

Page

1. Call to Order

2. Invocation

3. Roll Call

4. Announcements/Addenda

5. Declarations of Pecuniary Interest

6. Notice of Upcoming Public Meetings

(a) Proposed Official Plan & Zoning By-law Amendment

Re: 255 High Street - Owner: Lions Douglas Heights Senior Residence (c/o Jayne Dodd) - Applicant: Niagara Regional Housing (c/o Gordon Szaszi) - Agent: Susan Smyth (Quartek Group Inc.) - Monday, March 8, 2021 - 6:00 p.m. - Via Video Teleconference. The information report will be available on March 3, 2021.

(b) Proposed Zoning By-law Amendment

Re: 0-13365 Pettit Road - Owner: KRS Holding Inc. (Gary Singh) - Agent: D.C. McCloskey Engineering Ltd. (Mark McCloskey) - Monday, March 8, 2021 - 6:00 p.m. - Via Video Teleconference. The information report will be available on March 3, 2021.

7. Closed Session

(a) Pursuant to Subsection 239 (2) (e) of the *Municipal Act. 2001* - Litigation or potential litigation, including matters before administrative tribunals, affecting the municipality or local board and Subsection 239 (2) (f) of the *Municipal Act, 2001* - advice that is subject to solicitor-client privilege, including communications necessary for that purpose

Re: Alliston Woods Draft Plan of Subdivision - Appeal of Draft Conditions - Minutes of Settlement

Resolution: To be presented.

8. Regional Councillor Report

9. Presentations and Delegations

(a) David Adames, CEO, and Sandie Bellows, Chair, Niagara Parks Commission

Re: General Update Briefing on Niagara Parks
(PowerPoint Presentation)

(b) Stephen Passero, Past President Fort Erie Lions Club, Co-Chair New Build Committee

Re: Update on Proposed New Apartment Building - 255 High Street; Lions Douglas Heights Seniors Residence and CMHC Application

(c) Lynne Cunningham, Account Manager, Municipal and Stakeholder Relations, MPAC

Re: About MPAC -Valuing Ontario Together
(PowerPoint Presentation)

10. Consent Agenda Items

10.1 Request to Remove Consent Agenda Items

10.2 Consent Agenda Items for Approval

1. Minutes

11 - 30 (a) Approve - Council Meeting - January 18, 2021
January 18r - minutes

31 - 39 (b) Approve - Council-in-Budget Committee No. 3 Meeting - February 3, 2021

Page

February 3 - CIB No. 3 - minutes

40 - 52 (c) Approve - Council-in-Committee Meeting - February 8, 2021
February 8c - minutes

53 - 55 (d) Approve - Special Council Meeting - February 8, 2021
February 8spr - minutes

2. Correspondence

56 - 57 (a) Receive & Support - Town of Lincoln - Niagara Region to Conduct Research Regarding the Feasibility of a Pilot Project to Assist with the Securing of Recycling Bin Contents and Share Results from the 2019 Study
Comm(a)-Lincoln

58 - 71 (b) Receive - ADR Chambers, Integrity Commissioner Office for the Town of Fort Erie - Report - Councillor Don Lubberts Complaint IC-12149-1220
Comm(b)-Integrity Commissioner

3. Board/Committee Minutes

72 - 74 (a) Receive - Ridgeway Business Improvement Area Board of Management - January 13, 2021; February 3, 2021
RBIA-Jan13
RBIA-Feb3

75 - 76 (b) Receive - Crystal Beach Business Improvement Area Board of Management - Annual General Meeting - January 20, 2021
CBBIA-AGM-Jan20

4. Report

77 - 104 **PDS-13-2021** Planning and Development Services - Development, Building and By-law Statistical Reporting - Fourth Quarter 2020

Resolution:

That: Council receives Report No. PDS-13-2021 regarding development, building and by-law statistical reporting for information

purposes, and further

That: Council directs staff to forward a copy of Report No. PDS-13-2021 to the Regional Planning and Development Services Department, the Fort Erie Economic Development and Tourism Service, the District School Board of Niagara and the Niagara District Catholic School Board.
PDS-13-2021 Q4 PDS Subdivision-Building-By-law Status Report

5. Other Matters

Consent Agenda Resolution
Resolution:

That: Council approves the Consent Agenda Items as recommended.

10.3 Items Removed to be Dealt with Separately

11. Reports

105 - 149 **PDS-14-2021** Urban Area Boundary Expansion Study - Addendum #1
Resolution:

That: Council endorses the Urban Boundary Expansion Study – Addendum #1, for the purpose of the Region of Niagara's Municipal Comprehensive Review process, attached as Appendix "1" to Report No. PDS-14-2021, and further

That: Council directs Staff to forward a copy of the Study to the Region of Niagara to further inform the Region of Niagara's Municipal Comprehensive Review and Official Plan Update.
PDS-14-2021 UAB Expansion Addendum #1 Recommendation Report FINAL

150 - 209 **PDS-15-2021** Proposed Draft Plan of Subdivision and Amendment to the Town of Fort Erie Official Plan and Zoning By-law No. 129-90 - Royal Ridge Phase

2 - 613 Ridge Road North - Royal Oak Property Developments c/o Brent King (Owner) - KLM Planning Partners Inc. (Agent)

Resolution:

That: Council approves the Royal Ridge Phase 2, Draft Plan of Subdivision dated June 11, 2020, showing a block for a 4 storey 40 unit apartment building, 3 blocks for 3 semi-detached dwellings, a lot for a single detached dwelling, a block for the park and a block for environmental protection area, as shown in Appendix “3” of Report No. PDS-15-2021, in accordance with the provisions of the *Planning Act R.S.O. 1990 c.P. 13* and the Regulations thereunder, subject to the conditions contained in Appendix “7” of Report No. PDS-15-2021, and further

That: Council directs staff to circulate the Conditions of Draft Plan Approval in Appendix “7” of Report No. PDS-15-2021 to the applicable agencies in accordance with the requirements of the *Planning Act*, and further

That: Council approves the amendments to the Town’s Official Plan for Royal Ridge Subdivision as detailed in Appendix “5” of Report No. PDS-15-2021, and further

That: Council approves the amendments to the Town's Zoning By-law No. 129-90 as detailed in Appendix "6" of Report No. PDS-15-2021 for the Royal Ridge Phase 2 Subdivision, and further

That: Council directs staff to prepare the necessary by-laws.

PDS-15-2021 Royal Ridge Phase 2 Recommendation Report FINAL

210 - 294 **PDS-16-2021** Proposed Official Plan and Zoning By-law Amendment - 7 Central Avenue & 100-1 Queen Street - P. Leigh Whyte (PLW Consulting) (Agent) - Compass Heights Development Ltd (Jeffery Andrews) (Owner) - Buffalo & Fort Erie Peace Bridge Authority (PBA) (Owner)

Resolution:

That: Council approves the amendments to the Town's Official Plan and Zoning Bylaw No. 129-90 as detailed in Appendix "8" and Appendix “9” of Report No. PDS-16-2021 for the lands known as 7 Central Avenue and a portion of 100-1 Queen Street, and further

That: Council approves the entry into a Community Benefits Agreement pursuant to Section 37 of the *Planning Act* with Compass Heights Development Ltd., for the lands known as 7 Central Avenue and a portion of 100-1 Queen Street, upon the terms and conditions outlined in Appendix “10” to Report No. PDS-16-2021, and in a form satisfactory to the Town Solicitor, and further

That: Council directs staff to prepare the necessary by-laws.
PDS-16-2021 7 Central OPA Zoning By-law Amendment Rec Report FINAL

295 - 350	**PDS-17-2021**	Animal Welfare, Protection and Control By-law Recommendation Report

Resolution:

That: Council receives the draft Animal By-law attached as Appendix “1” to Report No. PDS-17-2021, and further

That: Council chooses Option No._____ for the licensing of cats, and further

That: Council approves the draft Animal By-law attached as Appendix “1” to Report No. PDS-17-2021, subject to the revisions required to implement Council’s choice of Option No. _____ for the licensing of cats.
PDS-17-2021 Animal by-law

351 - 362	**FES-03-2021**	Award of Tender for the Construction of Fire Station #4 – Contract No. FEFD-20T-FSTN19

Resolution:

That: Council authorizes the extension of the

Raimondo and Associates Architects Inc. (F. Emilio Raimondo, President) assignment for contract administration and inspection services in the amount of $122,766.03 (including 13% HST), and further

That: Council amends the 2020 Capital Budget to supplement the Fort Erie Fire Department – New Station No. 4 – Contract No. FEFD-20T-FSTN19 by $2,650,000, with an increase in Debentures ($2,650,000), and Land Sales ($325,000.00), and a decrease in Development Charges Reserve Funding ($325,000), and further

That: Council accepts and approves the tender submission for the Fort Erie Fire Department – New Station No. 4 - Contract No. FEFD-20T-FSTN19, a Stipulated Price Contract from G.S. Wark Limited (Craig Hambly, President), as recommended by Raimondo and Associates Architects Inc., in the amount of $6,521,795.00 (including 13% HST).
FES-03-2021 ~ AWARD OF TENDER FOR THE CONSTRUCTION OF STATION 4 - CONTRACT NO FEFD-20T-FSTN19

12. New Business/Enquiries

(a) Appointment - Ridgeway Business Improvement Area Board of Management - Tyler B. Chevalier and John Arbour ***(CONFIDENTIAL MEMORANDUM)***

Resolution:

That: Council appoints Tyler B. Chevalier and John Arbour to the Ridgeway Business Improvement Area Board of Management for the period ending November 14, 2022.

(b) Niagara Transit Governance Model - Consolidation of Niagara's Public Transit System

Resolution:

That: Council supports, in principle, the Full Commission as the recommended governance model for the consolidation of Niagara’s public transit system subject to further review of the recommendations from this Council.

13. Motions

(a) Councillor Dubanow

Re: Request the Minister of Municipal Affairs and Housing to amend the *Municipal Act, 2001* to Enhance the Powers of the Integrity Commissioner with Respect to Egregious Code of Conduct Violations by Members of a Municipal Council.

(To be Withdrawn)

14. Notice of Motion

15. Consideration of By-laws

363 - 368	**12-2021**	To Adopt the General Capital Budget and the General Levy Operating Budget for the Town Of Fort Erie for the Year 2021 12-2021 - Levy & Capital Budget combined
369	**13-2021**	To Authorize the Entry into and Execution of a Letter of Agreement with Her Majesty the Queen in right of the Province of Ontario Represented by the Minister of Transportation under the Dedicated Gas Tax Funds for Public Transportation Program 13-2021 MTO Agree Gas Tax Funds
370 - 405	**14-2021**	To Enact an Amendment to the Official Plan Adopted by By-law No. 150-06 for the Town of Fort Erie Planning Area Amendment No. 48 - Jason Pizzicarola - Agent - Frank Kenneth DiCorso - Owner - 0-6489 Nigh Road 14-2021 OPA-48- OPA for 0-6489 Nigh Road
406 - 408	**15-2021**	To Amend Zoning By-law No. 129-90 - 0-6489 Nigh Road - Jason Pizzicarola – Agent - Frank Kenneth DiCorso 15-2021 0-6489 Nigh Road Zoning By-law
409 - 412	**16-2021**	To Exempt Certain Lots in Plan 59M-438 from Part Lot Control, Block 57, 4116, 4120, 4124 and 4128 Village Creek Drive Park Lane Home Builders Limited (J. Hill) 16-2021 - Removal of Part Lot Control - 4116, 4120, 4124, 4128 Village Creek Drive, Block 57, Plan 438 MEMO - By-law 16-2021 Removal of Part Lot Control- Parts 1 to 5, Block 57 59M-438
413 - 414	**17-2020**	To Authorize the Execution of a Subdivision Agreement with Ashton Homes (Western) Limited

Page		
		(Aldo Vercillo) - (Peace Bridge Village Phase 2 – Stages 1 and 2) 17-2021 Peace Bridge Village Phase 2-1 2 Subdivision Agreement
415 - 416	**18-2021**	To Authorize the Execution of a Subdivision Agreement with Park Lane Home Builders Limited (Debbie Hill) - (Peace Bridge Village Phase 2 – Stage 3) 18-2021 Peace Bridge Village Phase 2-3 Subdivision Agreement
417 - 418	**19-2021**	To Authorize the Execution of an Assumption Agreement for the Hagey Avenue Condominium with 1703385 Ontario Inc. (John Maletta) and Niagara South Standard Condominium Corporation No. 162 (John Maletta) 19-2021 Hagey Condominium Assumption Agreement
419 - 420	**20-2020**	To Authorize the Execution of an Assumption Agreement for the Bertie Street Condominium with 1703385 Ontario Inc. (John Maletta) and Niagara South Standard Condominium Corporation No. 163 (John Maletta) 20-2021 Bertie Condominium Assumption Agreement
421 - 430	**21-2021**	To Amend Fees and Charges By-law No. 40-09, as amended (Building Permit Fees and Short Term Rental Licence Fees) 21-2021 - Amend Fees & Charges (Building & STR)
431 - 432	**22-2021**	To amend Business Licensing By-law No. 217-05, as amended (Short Term Rentals) 22-2021 - Amend Business Licensing By-law No. 217-05, as amended (Short Term Rentals)
433 - 435	**23-2021**	To Authorize the Entry into an Extension Agreement with 5017018 Ontario Inc. o/a Garrison Square Plaza (John Krzysz) (Units 1 & 2, 660 Garrison Road) 23-2021 Authorize Entry Into an Extension Agreement - EDTS MEMO - Bylaw 23-2021 - Lease Extension EDTS
436 - 437	**24-2021**	To Authorize the Sale of Part of Lot 583, Plan 475 (0 Maple Avenue) to George Burgman and Raechal

Page

Eric
24-2021 Sale to Burgman & Eric - 0 Maple Ave

438 **25-2021** To Confirm the Actions of Council its Council-in-Budget Committee Meeting No. 3 held February 3, 2021, Council-in-Committee Meeting held on February 8, 2021 and Council Meeting held on February 22, 2021
25-2021 Confirmatory

16. Scheduling of Meetings

17. Adjournment

The Municipal Corporation of the Town of Fort Erie

Regular Council Meeting Minutes

Monday, January 18, 2021

Council Chambers via Video Teleconference

Due to the COVID-19 Pandemic and the Closure of Town Hall
All electronic meetings can be viewed at:
Town's Website:
https://www.forterie.ca/pages/CouncilAgendasandMinutes
Town's YouTube Channel: www.youtube.com/townofforterie
or click on the YouTube icon on the home page of the Town's website (www.forterie.ca) or Cogeco TV

1. Call to Order

Mayor Redekop called the meeting to order at 6:00 p.m.

Mayor Redekop acknowledged the land on which we gather is the traditional territory of the Haudenosaunee, Mississaugas of the New Credit, and Anishinaabe people, many of whom continue to reside in this area.

2. Invocation

The Clerk read the Invocation.

3. Roll Call

Present (In Council Chambers): His Worship Mayor Redekop

Present (Via Zoom Teleconference): Councillors Butler, Dubanow, Lubberts, McDermott, Noyes, and Zanko

Also Present (Via Zoom Teleconference): Regional Councillor Insinna,

Staff (Via Zoom Teleconference): K. Dolch, K. Gennings, J. Janzen, T. Kuchyt, E. Melanson, C. Schofield, and K. Walsh

This meeting was held in compliance with the electronic participation provisions of Council Rules of Procedure By-law No. 36-2016, as amended.

4. Announcements/Addenda

Mayor Redekop made the following announcements:

- **Free Grocery Giveaway**

  A free grocery giveaway will be taking place at St. Michael's Church on Wednesday, January 20th thanks to an anonymous individual who has been making large donations of food in various locations in Niagara. Fort Erie's opportunity to be a part of these food donations came about through the efforts of Reverend Bill Thomas, Jonna Wolfenberg with Community Support Services Niagara, Matthew House Refugee Ministry, First Baptist Church, and St. Michael's Roman Catholic Church.

  The Grocery Giveaway will include pre-packaged grocery bags that will be provided to individuals who line up in a contactless drive-through format. Individuals will be asked to open their trunk when they arrive at the food stations and the bags will be placed in the trunk. COVID-19 protocols will have to be followed. For those arriving on foot, there will be a walk-up line, where you will be asked to practice physical distancing.

  I want to thank, aside from those individuals who have been instrumental in bringing this to Fort Erie, the Town Councillors who reached out, in particular Councillor Butler, Councillor McDermott, Councillor Dubanow and the other members of Council who have supported this. Councillor Butler was able to connect with, Steve Murray, who is providing a lift truck and a lift palette to assist the movement of the groceries from the delivery truck. I also want to thank Town Staff and the Fire Chief for their assistance in sorting out the logistics of the event.

  The Grocery Giveaway is a tremendous opportunity of great generosity. I want to thank the individual donor and all of those whom I've mentioned before, and hopefully the community will take full advantage of this opportunity.

  COVID-19 Update

  As many of you know, COVID-19 vaccinations have begun in Niagara. Public Health has also updated its website which is in a very informative format now, and provides a lot of information: cases, breakdown per community and the number of active cases. The Public Health website is also providing statistics with respect to vaccinations throughout Niagara. On the Town of Fort Erie webpage

you can find Fort Erie specific statistics and data as well as a link to the Public Health webpage.

Shipments of the Pfizer vaccine have been delayed to Niagara; however, this has been a challenge across Canada and in Ontario. The numbers of vaccines that are being requested and required right now are outstripping the supply. I am hopeful that this will be dealt with shortly. Pfizer has internationally reduced its output in order to do some work to expand its capacity, so that in a month or so, they will be able to ship out more. There are other vaccines that are coming that will follow Pfizer and Moderna, and hopefully when those vaccines are approved, we will be getting more here as well. There was a shipment scheduled for next week that I believe is going to be cancelled, but there are a couple of shipments starting in February that may be slightly less than anticipated. The reality is that there's a tremendous need for these vaccines across the province and the country.

In Fort Erie, Gilmore Lodge has had a 100% vaccination for not only the residents but I believe the workers. Crescent Park Lodge may now be at a 100%; it was approximately 97% yesterday. The other Long-Term Care Homes in Niagara are in various stages of inoculation. Vaccination at Long-Term Care Homes continues to roll out and I want to assure the public that Niagara Public Health are doing all that they can. I know that there has been work on the mass inoculation plan because there's been a follow-up outreach to municipalities with respect to locations, and there are efforts being made to put in place the actual vaccination clinics as the vaccines become available.

The Town has been working on a variety of aspects of the COVID-19 pandemic: communications, enforcement, and the safety of employees. Most recently, the Town’s Communications Coordinator, Janine Tessmer, has released new videos to social media and, we would like to share one of those videos with you tonight. The intent of these new videos is to share the message of COVID protocols in a new format.

A video of Joanne Ferraccioli, Community Health Care Services Coordinator, sharing a message with the community regarding COVID-19 was shown.

This video is one of a few videos the Town has released and there will be more videos like it to come. This style of video is an interesting new way to get the COVID-19 safety messages across and also provide additional information to our residents. Thank you to the staff who have been developing these videos.

5. Declarations of Pecuniary Interest

(a) Councillor Dubanow

Councillor Dubanow declared pecuniary interests with respect to Delegation 9 (c) Michael Barker and Report No. PDS-06-2021 Re: Spears Park Master Plan, as he lives in Spears Estates. He abstained from participating in the Delegation presentation, and from discussing and voting on Report No. PDS-06-2021.

6. Notice of Upcoming Public Meetings

(a) 2021 Budget Meeting Schedule

Council-in-Budget Committee Meetings:
#3 - Wednesday, February 3, 2021 - Library, General Levy Operating Budget & Assessment Analysis;
#4 – Wednesday, February 10, 2021 – (If required).

All budget meetings begin at 6:00 p.m. Via Video Teleconference.

Budget By-laws:
Monday, February 22, 2021 – General Levy Budget By-law and General Capital Budget By-law.

7. Public Meeting

(a) Public Meeting

Re: *Building Code Act* - Proposed Increase in Building Permit Fees. The proposal is to increase fees by various percentages effective February 23, 2021. The objective of these increases is for the Building Department to operate closer to cost recovery from permit fee revenue. The costs of administering and enforcing the *Building Code Act* is available on the Town's website.

Mayor Redekop announced that this portion of the meeting would be devoted to the holding of the Public Meeting.

Mayor Redekop also provided information on electronic participation for members of the public who wished to provide input relative to the Application.

Mr. Gennings, Chief Building Official, delivered a PowerPoint Presentation which is available for viewing on the Town's

website.

Mayor Redekop enquired whether there were any members of the public in the waiting room who wish to speak in favour of the Application.

No members of the public came forward.

Mayor Redekop enquired if any members of the public wished to address Council regarding the proposed fee increases.

No members of the public came forward.

Mayor Redekop declared the Public Meeting closed.

8. Regional Councillor Report

Regional Councillor Insinna wished Council and staff a Happy New Year and reported on matters at the Region as follows:

Niagara Region Transit Governance Study

RC Insinna advised that he has been very active in representing the interests of Fort Erie residents to the Region's Transportation Department. RC Insinna thanked Mr. Robinson for attending the meeting and presenting the Niagara Region Transit Governance Study.

Regional Budget

RC Insinna advised that the Region has held 3 budget workshops and 4 meetings thus far regarding the 2021 budget. The final budget meeting is scheduled for this Thursday with the overall goal of not adding any extra burden on the taxpayers during these difficult times. Thus far, the blended rate is on track to be less than 3%.

COVID-19

RC Insinna advised that, at the last Public Health and Community Services meeting, a resolution was passed to create a Task Force to deal with the COVID-19 response. The Committee as advised by the Public Health Officer that there was a disconnect with Niagara Health, Niagara Public Health and the Province. The Task Force has been modelled after the one in Waterloo, made up of experts in the medical profession. It is mandated to report to Council on a bi-weekly basis. RC Insinna added that Mayor Redekop and himself have continued to press for more information from Public Health so that Municipalities can make informed decisions. He added that he is also happy to see that the

Region website has been updated to provide more information.

Ontario Climate Consortium (OCC)

RC Insinna advised that the Region will be entering into a contract with Ontario Climate Consortium (OCC), a non-profit climate science leader, in order to provide climate change modelling and projections data. RC Insinna stated this data will be shared with all partners to help inform future policy decisions that will need to be made. RC Insinna further added that this project is to start this February and the findings are to be brought forward near the end of the year.

Waste Management

RC Insinna stated that garbage issues continue to persist. He asked that anyone continuing to have problems, to please contact the Region or himself for assistance.

Alzheimer's Society of Niagara Foundation

RC Insinna announced that, on Sunday January 31, 2021, the Alzheimer Society of Niagara Foundation is celebrating its 17th Annual Walk for Alzheimer's. RC Insinna advised that, due to the pandemic, the walk will be attended virtually with participants committing to walk 10,787 steps in their own location; 1 step for each person living with dementia in Niagara. If you are interested in participating and like to walk, please go to www.alzgiving.ca/niagara.

Councillor Dubanow stated that he received an email from a resident regarding the recycling of fluorescent tubes as they were unable to recycle them at the Bridge Street Landfill in Town. Councillor Dubanow enquired whether this issue could be brought to the appropriate Director at the Region as it would assist residents in avoiding long trips to Welland to recycle fluorescent tubes.

RC Insinna advised he would raise the issue.

9. Presentations and Delegations

(a) Matt Robinson, Director and Scott Fraser, Transportation Lead, GO Implementation, Niagara Region

Re: Niagara Region Transit Governance Study (NTGS) (Report - LNTC-C-2020)
Moved by: Councillor Dubanow
Seconded by: Councillor McDermott

That: The delegation's time to provide their presentation be extended to15 minutes. **(Carried)**

Mr. Robinson delivered a PowerPoint Presentation which is available for viewing on the Town's website.

Mr. Robinson provided the following information in his presentation:

- Local area municipality support and feedback being sought by February 28, 2021
- The NTGS seeks in integrate to; better connect riders, increase equity, enhance growth, accessibility, meet evolving travel needs, strengthen economic development and tourism, employment, and support sustainability
- NTGS efforts should be implemented now to; coordinate COVID-19 response & recovery, leverage Federal/Provincial Funding Opportunities, maximize use of resources, integration with GO Network Expansion, on-demand model opportunities, seamless specialized and conventional transit
- NTGS project milestones include: current state and leading practices, future state transit service plan, model options development, model analysis, transit planning
- NTGS recommends a full commission model for the following reasons:
    - brings the right balance of autonomy and flexibility to innovate, drive growth, and meet the diverse and changing needs of the region
    - exclusively focused on transit
    - responds to trends and pressures
    - responsible for strategic and operational decisions
    - nimble to idea in action
    - negotiating power
    - more cost efficient
    - less costly per trip
    - flexibility to be strategic
    - regionally focused investments
- The full commission is best suited to grow transit in the region while delivering high quality, innovative, and seamless transit services
- The Full Commission will consist of 9 total voting members: 5 members of Regional Council (Welland, St. Catharines, Niagara Falls and 2 from the remaining Niagara municipalities) 4 skills-based pr public members and the Transit Commission General Manager as Ex-

Officio
- The Advisory Committee will consist of 12 Niagara Residents, 2 members of the Accessibility Advisory Committee, 1 Student from Niagara College and 1 Student from Brock University, 1 member from Niagara Chamber of Commerce and 1 Transit Commission General Manager, or designate
- 5 Step Transit Plan: Integration approval process, commission establishment, commission setup, service launch and enhancement growth
- Connect Fort Erie residents to the Region, enhancements and benefits:
    - NRT on-demand
    - GO Transit
    - Economic Growth
    - Tourism
    - Social Equity
    - Enhance Service
- Leveraging Prior Capital Investments: shared access to transit assets, net operating expenditures $43.4M, cost $127.5M, cummings principle
- Fort Erie Benefits and Investment:
    - One Regional Levy funds 100% of Commission by 2027
    - Financial Strategy supports transit expansion in Fort Erie
    - Commission positioned to lead growth strategy
- Local area municipal feedback and support is being sought for a Full Commission governance model and the associated financial strategy
- Inputs to consolidated system: development charges, population and assessment growth, business developments, and intergovernmental funding
- Key considerations:
    - Full Commission Governance Model
    - Single Regional Levy with Five Year Transfer
    - Minimum 2021 service hours maintained for 5 years
    - Transfer of assets. Employee, and contracts
- Next Steps: LNTC Support, LAM Support, NRT/NST Impacts to Region PWC, Triple Majority Approval, Transition Plan

(b) Catherine Mindorff Facca, Strong Fort Erie Neighbourhoods and Barb Hopkins, Secretary, Senior Citizens Advisory Committee

Re: Establishment of an Age-Friendly Fort Erie

Ms. Mindorff Facca delivered a PowerPoint Presentation which is available for viewing on the Town's website.

Ms. Mindorf Facca provided the following information in her presentation:

- Strong Fort Erie Neighbourhoods is a network of people and organizations who have been working together since January, 2019 to address barriers to prosperity
- The five pillars of the organization are:
    - Children's health and wellbeing
    - Healthy youth
    - Access to healthy food
    - Age-friendly community for all
    - Investing in people in our community
- In Fort Erie, according to the 2016 Census:
    - 41.52% of adults are aged 55 and over.
    - 23.74% of adults are aged 65 and over.
- Currently in Fort Erie there are:
    - 13 social organizations to which older adults belong.
    - 83 organizations locally/regionally that serve older adults.
- Age Friendly Working Group mission statement - all people who live in Fort Erie, regardless of age, ability, need or capacity, are able to engage fully in community life
- An age-friendly community allows people of all ages to participate in activities that keep the community healthy and encourages economic stability.
- It is a place where older persons can easily stay connected with others and remain independent.
- Five Main Objectives:
    - To establish Age-Friendly Fort Erie as a regional member of the Niagara Age-Friendly Network.
    - To connect with each group in Fort Erie that serves older adults and create a network for communicating and supporting each other's goals.
    - To master new information about, "Care for the Caregivers" for the purpose of engaging caregivers in all aspects of Fort Erie community life.
    - To establish or connect to a peer navigation service for health and social services for older-adults living in Fort Erie..

    - To investigate the emergence of, “Cyber Seniors” and its potential benefit to older adults living in Fort Erie.
- Town of Fort Erie Strategic Plan Priority #1 - Optimizing Health, Housing and Social Wellbeing through Service Access and Healthy Lifestyle.
    - The AARP identifies 8 domains of livability: Outdoor spaces and buildings, transportation, housing, social participation, respect and social inclusion, work and civic engagement, communication and information, and community and health services
- Building strong communities through network weaving
- Next steps to consider: become an Age-Friendly Community and Age-Friendly Fort Erie joins the Age-Friendly Niagara Network

(c) Michael Barker, Principal, SHIFT Landscape Architecture

Re: Spears Park Master Plan (Report No. PDS-06-2021)

Mr. Barker delivered a PowerPoint Presentation which is available for viewing on the Town’s website.

Mr. Barker provided the following comments during the presentation:

- Project timeline including start up from April 2020 to contract documents and construction in 2021
- Location at the corner of Kerby Street and Meadowood Street
- Land Use Plan designation as Open Space (Neighbourhood Park)
- 0.46 acres with budget of approximately $275,000.00
- Park features including:
    - a buffer strip for the adjacent dwelling
    - play equipment
    - tree planting
    - a gathering space
    - features to accommodate all ages
    - directing drainage to the existing swale
    - protection from harsh winter winds
    - accommodation of potential trailway
    - accommodation of potential road
    - creating a street presence and align with existing sidewalk
    - consideration of how sun exposure will affect

microclimate
    - maintain good visibility of the park from the road
- preliminary concepts of the park design
- previous public engagement including input from neighbourhood and students
- further public engagement and refined design concepts
- final concept with details from public consultation
- total cost estimate – approximately $300,000
- next steps including development of contract documents, tender, and construction

10. Consent Agenda Items

10.1 Request to Remove Consent Agenda Items

None.

10.2 Consent Agenda Items for Approval

1. Minutes

(a) Approve - Council Meeting - December 14, 2020

(b) Approve - Council-in-Committee Meeting - January 11, 2021

2. Correspondence

(a) Receive - Niagara Region - Recommendations for Consideration - Linking Niagara Transit Committee (Report - LNTC-C-2020)

(b) Receive and Support - City of St. Catharines - Hospice Niagara's Request to Fully Fund All Hospice Health Care Workers

(c) Receive & Support - Town of Pelham - Support for 988 Crisis Line

3. Board/Committee Minutes

(a) Receive - Bridgeburg Station Downtown Business Area Board of Management - December 8, 2020 (Annual General Meeting and Regular Meeting)

(b) Receive & Approve Recommendations - Street Naming and Wayfinding Committee - December 15, 2020, regarding:

(a) Approve adding the following names to the Approved Street Name List
(i) Shores Lane
(ii) South Coast Circle

(b) Approve changing the name of "Bright Avenue" to "John Bright Avenue" **(Carried)**

4. Reports

CAO-02/LC-02-2021 Land Matters: January 7, 2021 Land Committee Meeting Minutes

That: Council receives the January 7, 2021 Land Committee meeting minutes attached as Appendix “1” to Report No. CAO-02/LC-01-2021. **(Carried)**

FES-01-2021 Award of Tender to David Chevrolet Corvette Buick GMC Ltd. (Mel Annett) for the Purchase of 2 new 2021 Full-size, Full 4 Door/Crew Cab, Short Box, Pick-up Trucks, Automatic, 4 Wheel Drive - Contract No. FEFD-20T-FRPUS

That: Council accepts and approves the tender submission from David Chevrolet Corvette Buick GMC Ltd. (Mel Annett) for the purchase of 2 New 2021 Full-Size, Full 4 Door/Crew Cab, Short Box, Pickup Trucks, Automatic, 4 Wheel Drive – Contract No. FEFD-20T-FRPUS in the amount of $72,435.26 (including 13% HST). **(Carried)**

5. Other Matters

Consent Agenda Resolution

Resolution No. 1
Moved by: Councillor Lubberts
Seconded by: Councillor McDermott

That: Council approves the Consent Agenda Items as recommended.

Resolution No. 1A
Moved by: Councillor Noyes
Seconded by: Councillor McDermott

That: Correspondence Item 10.2 2(a) be amended by changing “Receive” to “Receive and Support”. **(Carried)**

Following approval of the amendment, the Consent Agenda was voted on as follows:

That: Council approves the Consent Agenda Items as amended. **(Carried)**

10.3 Items Removed to be Dealt with Separately

None.

11. Reports

PDS-06-2021 Spears Park Master Plan

Resolution No. 2
Moved by: Councillor Zanko
Seconded by: Councillor Noyes

That: Council receives and approves the Spears Park Master Plan, to guide development of the park in 2021. **(Carried)**

PDS-07-2021 Sale of Limited Marketability Land: 0 Maple Avenue - Lot 583, Plan 475, Bertie; Fort Erie, Being all of PIN 64196-0015 (LT) - George Burgman

Resolution No. 3
Moved by: Councillor Dubanow
Seconded by: Councillor Noyes

That: Council authorizes and approves the sale of 0 Maple Avenue, Lot 583, Plan 475, Bertie; Fort Erie, being all of PIN 64196-0015 (LT) as a Limited Marketability parcel to the Applicant, George Burgman, for the amount of $7,900.00 plus HST, subject to the land legally merging in title with the Applicant’s abutting property, and further

That: Council directs that a by-law be submitted to Council to authorize the entry into an Agreement of Purchase and Sale. **(Carried)**

PDS-08-2021 Short Term Rental Accommodations Recommendation Report

Resolution No. 4
Moved by: Councillor Butler
Seconded by: Councillor McDermott

That: Council chooses Option No. ___ in order to address “ghost hotels”, and further

That: Council chooses Option No. ___ in order to address enforcement, and further

That: Council chooses Option No. ___ regarding fee increases for the next two years, and further

That: Council directs staff to report back on the effectiveness of the short-term rental accommodation program by the end of 2021.

Councillor Butler requested that the recommendations be dealt with separately.

Resolution No. 4A
Moved by: Councillor Butler
Seconded by: Councillor McDermott

That: Council chooses Option No. 3 in order to address “ghost hotels”.

Councillor Butler advised that she identified the Option she chose incorrectly.

Resolution No. 4B
Moved by: Councillor Dubanow
Seconded by: Councillor Zanko

That: Addressing “ghost hotels” be referred back to staff for a report with additional information and recommendations. **(Carried)**

Resolution No. 4C
Moved by: Councillor Dubanow
Seconded by: Councillor Zanko

That: Council chooses Option No. 1 in order to address enforcement.
*Councillor Dubanow moved a friendly amendment with the support of his seconder to change Option No. “1” to Option No. “2”***.**

That: Council chooses Option No. 2 in order to address enforcement. **(Carried)**

Resolution No. 4D
Moved by: Councillor McDermott
Seconded by: Councillor Zanko

That: Council chooses Option No. 1 regarding fee increases for the next two years. **(Carried)**

Resolution No. 4E
Moved by: Councillor Butler
Seconded by: Councillor McDermott

That: The Report recommendations be amended by adding the following additional recommendations:

> **That:** The Penalty for operating a Short Term Rental without a licence be increased to $600. **(Carried)**

Resolution No. 4F
Moved by: Councillor Butler
Seconded by: Councillor McDermott

That: Council directs staff to report back on the effectiveness of the short-term rental accommodation program by the end of 2021. **(Carried)**

Council recessed at 9:11 p.m. for 5 minutes.

PDS-09-2021 Proposed Changes to Building Permit Fees

Resolution No. 5
Moved by: Councillor McDermott
Seconded by: Councillor Butler

That: Council approves the recommended user fees and charges in Appendix “1” to Report No. PDS-09-2021 regarding proposed changes to the Building Permit fees. **(Carried)**

12. New Business/Enquiries

(a) Councillor Zanko advised that recently a member of the public sent an

email regarding a trip that she had taken in November. The writer said that if she wasn't removed from Council immediately, they would be contacting the papers, and also wanted this addressed very quickly.

Councillor Zanko stated that she was surprised by the email and felt that the best way she could address it was in a public setting, such as a Council meeting.

Councillor Zanko advised that on November 21st she travelled with her husband out of the country, and followed all of the government protocols under the *Quarantine Act* upon her return.

Councillor Zanko continued that due to the recent spotlight on travel, and a higher level of full-time government officials travelling over the past few weeks, she has seen that residents have been impacted by this. She stated that the fact is, COVID has changed drastically over the past 2 months, including a recent lockdown. In November, she would have never thought that her travelling would have offended residents or hurt them.

Councillor Zanko advised that she is not a full-time employee of the Town, and with that being said, she wanted to bring this to everyone's attention, and wished to apologize if her travelling did hurt or offend any of her constituents.

Councillor Zanko stated that she does plan to complete her term on Council, and she thought this would be the best way to bring this to everyone's attention.

Mayor Redekop thanked Councillor Zanko and advised that he believes that residents should expect honesty, openness, and forthrightness from their elected representatives, and in his opinion, Councillor Zanko's comments reflect all three.

(b) Councillor Noyes

Councillor Noyes referred to a Report a few weeks ago regarding added value to agricultural lands which included using barns for social functions. One of the comments made was that development fees could apply. In discussion with Ms. Dolch, there are a lot of requirements if someone wants to make their barn into a public venue. She questioned what the process would be.

Ms. Dolch advised that a Change of Use Permit would be required, and depending on the use, development charges could apply. Site plan approval could also be required. Staff would need to look at each use on

a case by case basis to determine what would need to be addressed.

The Official Plan and Zoning By-law will be changed as part of the amendment, which will make the value added uses permitted.

13. Motions

(a) Councillor Dubanow

Re: Amend the Fence By-law - Privacy Screen Installations.

Resolution No. 6
Moved by: Councillor Dubanow
Seconded by: Councillor Zanko

That: Council directs staff to submit a Report with recommendations with respect to amending Fence By-law No. 70-2013 with respect to providing additional flexibility regarding setbacks and lengths for the installation of privacy screens when attached or placed next to a fence of open construction.

(Carried)

(b) Councillor Dubanow

Re: Request the Minister of Municipal Affairs and Housing to amend the *Municipal Act, 2001* to Enhance the Powers of the Integrity Commissioner with Respect to Egregious Code of Conduct Violations by Members of a Municipal Council.

(Postponed to February 22, 2021)

(c) Councillor Noyes

Re: Review Sign By-law to Allow Residents to Place Signs on Their Own Property Without a Permit Fee, in Regards to Freedom of Expression

Resolution No. 7
Moved by: Councillor Noyes
Seconded by: Councillor Dubanow

That: Staff are directed to review and recommend to Council amendments to Sign By-law No. 119-2017 to provide regulations governing signs expressing messages, including that such signs may remain in place for up to 3 months without the requirement of a permit.

(Carried)

14. Notice of Motion

None.

15. Consideration of By-laws

Resolution No. 8
Moved by: Councillor Butler
Seconded by: Councillor McDermott

That: The by-law package containing:

1-2021 To Waive Business Licensing Fees (Excluding Short Term Rentals) for 2021

2-2021 To Provide for Interim Taxes for the Year 2021

3-2021 To Authorize the Mayor or Acting Mayor and the Treasurer or Deputy Treasurer of The Corporation of the Town of Fort Erie to Borrow Certain Sums to Meet Expenses for the Year 2021

4-2021 To Adopt the 2021 Water and Wastewater Budget, to Adopt Rates and Fees for the Year 2021

5-2021 To Deem a Certain Registered Plan of Subdivision Not to be a Registered Plan of Subdivision - Paul Robert Collee and Mary Jane Collee - 3806 Crystal Beach Drive & 0 Crystal Beach Drive

6-2021 To Exempt Certain Lots in Plan 59M-452 from Part Lot Control, Block 3, 223, 227 and 231 Alderson Court - Park Lane Home Builders Limited (J. Hill)

7-2021 To Authorize the Entry into a Development Agreement with 2682384 Ontario Inc. (Adam Bosco) (3356 Thunder Bay Road)

8-2021 To Authorize Entry into an Agreement with Her Majesty the Queen in Right of Ontario as represented by the Minister of Transportation for the Province of Ontario for the Municipal Transit Enhanced Cleaning (MTEC) Fund

9-2021 To Establish a Park Naming Policy for the Town of Fort Erie

is given first and second reading. **(Carried)**

Resolution No. 9
Moved by: Councillor Noyes
Seconded by: Councillor Zanko

That: By-law Nos.:

1-2021
2-2021
3-2021
4-2021
5-2021
6-2021
7-2021
8-2021
9-2021

are given third and final reading to be signed by the Mayor and Clerk under the corporate seal. **(Carried)**

Resolution No. 10
Moved by: Councillor Lubberts
Seconded by: Councillor Dubanow

That: By-law No. 10-2021: To Confirm the Actions of Council at its Council-in-Committee Meeting held on January 11, 2021 and Council Meeting held on January 18, 2021 is given first and second reading. **(Carried)**

Resolution No. 11
Moved by: Councillor Zanko
Seconded by: Councillor Dubanow

That: By-law No. 10-2021 is given third and final reading to be signed by the Mayor and Clerk under the corporate seal. **(Carried)**

16. Scheduling of Meetings

- Fort Erie Public Library Board, Tuesday January 19, 2021, 4:00 p.m. via Zoom Teleconference
- Crystal Beach BIA Annual General Meeting, Wednesday January 20, 2021, 6:00 p.m. via Zoom Teleconference
- Transit Advisory Committee, Thursday January 21, 2021, 2:00 p.m. via Zoom Teleconference
- Greater Fort Erie Chamber of Commerce, Online Coffee Time, Friday January 22, 2021, 9:30 a.m. via GFECC website
- Infrastructure Services Subcommittee, Wednesday January 27, 2021, 3:00 p.m. via Zoom Teleconference

17. Adjournment

Resolution No. 12
Moved by: Councillor Dubanow
Seconded by: Councillor McDermott

That: Council adjourns at 9:46 p.m. to reconvene into a Regular Meeting of Council on February 22, 2021. **(Carried)**

_____
Mayor

_____
Clerk

The Municipal Corporation of the Town of Fort Erie

Council-in-Budget Committee Meeting No. 3 Minutes

Wednesday, February 3, 2021

Council Chambers via Video Teleconference

Due to the COVID-19 Pandemic and the Closure of Town Hall
All electronic meetings can be viewed at:
Town's Website:
https://www.forterie.ca/pages/CouncilAgendasandMinutes
Town's YouTube Channel: www.youtube.com/townofforterie
or click on the YouTube icon on the home page of the Town's website (www.forterie.ca) or Cogeco TV

1. Call to Order

Mayor Redekop called the meeting to order at 6:00 p.m.

Mayor Redekop acknowledged the land on which we gather is the traditional territory of the Haudenosaunee, Mississaugas of the New Credit and Anishinaabe people, many of whom continue to reside in this area.

2. Roll Call

Present (In Council Chambers): His Worship Mayor Redekop

Present (Via Zoom Teleconference): Councillors Butler, Dubanow, Lubberts, McDermott, Noyes, and Zanko

Also Present (Via Zoom Teleconference): Regional Councillor Insinna,

Staff (Via Zoom Teleconference): K. Dolch, J. Janzen, E. Melanson, C. Schofield, C. Shufelt, and K. Walsh

This meeting was held in compliance with the electronic participation provisions of Council Rules of Procedure By-law No. 36-2016, as amended.

3. Announcements/Addenda

None.

4. Declarations of Pecuniary Interest

None.

Mayor Redekop turned the Chair over to Councillor McDermott, Chair of Corporate Services.

5. Boards and Committees

(A) Presentations

(a) Craig Shufelt, CEO, Fort Erie Public Library

Mr. Shufelt introduced Gerry McCutchen, Chair of the Fort Erie Public Library Board, to give some opening remarks.

Mr. McCutchen stated that, although this has been a challenging year, he would like to focus on the current opportunities for the library; library staff faced the issues head-on and are dedicated to helping people navigate the system with the least amount of discomfort possible, and they did that. Mr. McCutchen added that the Friends of the FEPL continued to meet and focus on ways to improve the library with innovation; they are a great ally. Mr. McCutchen further added that the Library Board is a dedicated team, focusing on the future and honest deliberations. Mr. McCutchen stated that Craig Shufelt had been an incredible leader throughout this challenging year, making the library more efficient, growing the LiNC Program, and overseeing fiscal responsibility. Mr. McCutchen stated that, despite the circumstances, the library shined.

Mr. Shufelt delivered a PowerPoint Presentation, which is available for viewing on the Town's website.

Mr. Shufelt, CEO, Fort Erie Public Library, highlighted 2020 activities which included:

- Renovation of Children's and seating area completed at the Centennial branch
- LiNC expanded to include four additional Niagara public libraries
- First library in region to restore library services after closure
- Realized $100,000 in cost containment savings
- Disbursed 1,920 children's/teen craft kits and 406

adult craft kits
- Circulation down less than 20% despite closures/restrictions

Mr. Shufelt summarized the goals of the 2021-2023 budget; ensure sufficient funding to meet contractual obligations:
- Staff wages and benefits
- Janitorial contract
- Preventative maintenance contracts
- Other service contracts

Mr. Shufelt further summarized the goals and objectives for the 2021 budget specifically:
- Completion of new and existing capital projects
- Continuing to adapt to changes forced by pandemic (operational and capital)
- Implementation of new Strategic Plan

He provided a projected budget request for 2021 in the amount of $1,566,818 representing a 0% increase over 2020; and a Development Charges request of $45,000. Mr. Shufelt also provided a summary of supplementary revenue for 2021: $60,682 from a Provincial Operating Grant; $10,000 from Fines, fees and rentals; $3,000 from other revenues and $0 from capital reserves. He further provided that in 2022 and 2023 the Municipal Grant Request will be $1,594,818, a 1.8% annual increase and $1,635,508, a 2.5% annual increase respectively.

Mr. Shufelt discussed library funding comparisons with area municipalities, library service hours and funding per operating hour.

Mr. Shufelt, provided the account balances as of December 31, 2020:
- Operating (expected surplus) $41,423
- Operating Reserve $46,170
- Capital Reserve (unencumbered) $152,812

He referred to the 2021-2022 capital reserve with over $260,000 in capital projects planned for:
- Centennial meeting room space
- Shelving and seating at Stevensville

- Creation of zoom/meeting spaces at Centennial branch
- New service desk at Crystal Ridge
- Furniture and carpeting for remainder of Centennial branch

(b) Jonathan Janzen, Director, Corporate Services

Mr. Janzen delivered a PowerPoint Presentation which is available for viewing on the Town's website.

Mr. Janzen identified the following key areas of the 2020 General Levy Operating Budget:

- Background and 2020 Review;
- 2021 Budget: Base & Assessment;
- 2021 Budget: Supplementary;
- Consolidated Median Household Impact;
- Risks & Opportunities;
- Next Steps; and
- Recommendations.

Mr. Janzen provided background and 2020 Review with Budget inputs as follows:

- COVID-19: revenues & expenses adjusted to expected levels;
- 2018-2022 Strategic Plan: Council priorities & related initiatives with a focus on outcomes;
- Long-term financial planning: managing financial sustainability pressures (e.g., strategic policies & practices);
- Report No. CS-16-2020: 0% CPU re: controllable costs; and
- Corporate Sub-Committee: discussions to target/limit total tax bill increase.

With respect to the 2020 Review, Mr. Janzen provided an overview of:

- Funding structure overview with $75 million approved 2020 budgets
- Allocation structure of budget expenses by function;
- 2020 taxes billed for a total of $64.2M ($28.4M "lower tier", $27.2M "upper tier", and $8.6M "education"); and

- Tax calculation and comparison based on an Ontario study comparing 105 municipalities annually.

Mr. Janzen provided a review of the 2018-2022 Corporate Strategic Plan relative to 2020 accomplishments and financial performance.

Mr. Janzen explained the 2020 Base Budget:

- Overall Base Budget change of (0.36%) = 1.67% increase over 2020 less assessment growth reduction;
- Increase in revenues of $267,103;
- Decrease in expenses of $743,190;
- Total Budget including Supplementary, if all approved, is $29,202,635 or .42%;
- Total Tax Bill % increase for median household is 0.90%
- Total Tax Bill $ increase per month for median household is $4.00
- Identification of risks and opportunities;
- Next steps of budget process
- Proposed recommendations itemized in Report No. CBC-06-2021.

(B) Reports

CBC-04-2021 2021 Library Operating Budget

Recommendation No. 1
Moved by Councillor Butler

That: Council receives for information purposes Report No. CBC-04-2021 regarding the 2021 Fort Erie Public Library Board Budget request as set out in Appendix "1" and to be incorporated into the consolidated General Levy Operating Budget. **(Carried)**

6. Departmental Operating Budgets

(A) Reports

CBC-05-2021 Analysis of the 2020 Assessment for the 2021 Taxation Year

Recommendation No. 2
Moved by: Councillor Zanko

That: Council receives Report No. CBC-05-2021 regarding the analysis of the 2020 assessment for the 2021 taxation year for information purposes. **(Carried)**

CBC-06-2021 2021 General Levy Operating Budget

Recommendation No. 3
Moved by: Councillor Dubanow

That: Council receives Report No. CBC-06-2021, and each numbered item under the Recommendation be considered separately. **(Carried)**

PART 1
That: Council approves the following Supplementary Base Budget funding for 2021, subject of previous reports/resolutions:

PART 1.1
That: Council approves the 2021 Supplementary Base Budget funding of $45,000 for Capital Reserves - Bridge & Culvert Refurbishing. **(Carried)**

PART 1.2
That: Council approves the 2021 Supplementary Base Budget funding of $137,000 for Rural Ditching. **(Carried)**

PART 1.3
That: Council approves the 2021 Supplementary Base Budget funding of $41,050 for Municipal Law Enforcement Officer (spring/summer) wages and benefits. **(Carried)**

PART 2
That: Council approves the following Supplementary One-Time Funding for 2021, subject to previous reports/resolutions:

PART 2.1
That: Council approves the 2021 Supplementary One-Time funding of $50,000 for Hospice Niagara residential expansion, annually for 3 years, funded by the Community Health and Wellness Reserve. **(Carried)**

PART 3
That: Council excludes Supplementary Base Budget new funding requests for 2021. **(Carried)**

PART 4
That: Council approves the following Supplementary One-Time new funding requests for 2021:

PART 4.1
That: Council approves the 2021 Supplementary One-Time new funding request of $90,000 for Waterfront Landscape Design Guidelines and Standards funded by the Parkland Reserve. **(Carried)**

PART 4.2
That: Council approves the 2021 Supplementary One-Time new funding $21,000 for Snowbirds event funded by the GLRS Reserve. **(Carried)**

PART 4.3
That: Council approves the 2021 Supplementary One-Time new funding of $50,000 for Building Permit Fee and Process Review funded by the Building Permit Surplus Reserve. **(Carried)**

PART 4.4
That: Council approves the 2021 Supplementary One-Time new funding of $150,000 for Southend-Riverwalk Archaeological Assessment Study funded by the GLRS Reserve. **(Carried)**

PART 4.5
That: Council approves the 2021 Supplementary One-Time new funding of $250,000 for Urban Boundary Expansion Supplementary Studies funded by $45,000 from the DC Reserve and $205,000 from the GLRS Reserve. **(Carried)**

PART 5
That: Council approves the following grants for 2021:

PART 5.1
That: Council approves the 2021 Fort Erie Lions Senior Citizens Complex grant in the amount of $24,750. **(Carried)**

PART 5.2
That: Council approves the 2021 Business Improvement Area watering grant in the amount of $34,000. **(Carried)**

PART 5.3
That: Council approves the 2021 Beachcombers Seniors Complex grant in the amount of $19,235. **(Carried)**

PART 5.4
That: Council approves the 2021 Fort Erie Horticultural Society grant in the amount of $1,000. **(Carried)**

PART 5.5
That: Council approves the 2021 Community Events grants in the amount of $41,900. **(Carried)**

PART 5.6
That: Council approves the 2021 Fort Erie Public Library grant in the amount of $1,578,078. **(Carried)**

Moved by: Mayor Redekop

That: Part 6 be dealt with as a whole. **(Carried)**

PART 6
That: Council approves the following Business Improvement Area (BIA) levies for 2021, as follows:

PART 6.1
That: Council approves the 2021 Bridgeburg Station Business Improvement Area levy of $40,709.

PART 6.2
That: Council approves the 2021 Ridgeway Business Improvement Area levy of $35,000.
PART 6.3
That: Council approves the 2021 Crystal Beach Business Improvement Area levy of $15,000. **(Carried)**

PART 7
That: Council amends the 2021 Capital Budget as per Appendix "2" to Report No. CBC-01-2021 to substitute $870,000 of Sanitary Sewer Refurbishing Reserve funding and $206,740 of Water Refurbishing Reserve funding with Ontario Community Infrastructure Fund (OCIF) Formula-Based grant funds for the Lindbergh Drive Watermain and Sanitary Sewer Replacement project (LIND20). **(Carried)**

PART 8
That: Council approves the General Levy of $29,202,635 comprised of base budget of $28,979,585 and supplementary budget of $223,050, and approves the 2021 Capital Budget of $9,367,935 and directs staff to submit the related By-law.
(Carried)

PART 9
That: Council excludes capital asset amortization of $6.3 million from the 2021 General Levy Operating Budget. **(Carried)**

7. Date of Next Meeting

Not applicable.

8. Adjournment

Recommendation No. 4
Moved by: Councillor Dubanow

That: Council-in-Budget Committee Meeting adjourns at 7:49 p.m.
(Carried)

_____
Mayor

_____
Clerk

The Municipal Corporation of the Town of Fort Erie

Council-in-Committee Meeting Minutes

Monday, February 8, 2021

Council Chambers via Video Teleconference

Due to the COVID-19 Pandemic and the Closure of Town Hall
All electronic meetings can be viewed at:
Town's Website:
https://www.forterie.ca/pages/CouncilAgendasandMinutes
Town's YouTube Channel: www.youtube.com/townofforterie
or click on the YouTube icon on the home page of the Town's website (www.forterie.ca) or Cogeco TV

1. Call to Order

Mayor Redekop called the meeting to order at 6:10 p.m.

Mayor Redekop acknowledged the land on which we gather is the traditional territory of the Haudenosaunee, Mississaugas of the New Credit, and Anishinaabe people, many of whom continue to reside in this area.

2. Roll Call

Present (In Council Chambers): His Worship Mayor Redekop

Present (Via Zoom Teleconference): Councillors Butler, Dubanow, Lubberts, McDermott, Noyes, and Zanko

Staff (Via Zoom Teleconference): K. Dolch, J. Janzen, T. Kuchyt, E. Melanson, C. Schofield, and K. Walsh

This meeting was held in compliance with the electronic participation provisions of Council Rules of Procedure By-law No. 36-2016, as amended.

3. Announcements/Addenda

There was one Addendum being a revision to Report No. PDS-12-2021 to replace Appendix "4".

Mayor Redekop made the following announcements:

COVID- 19: Border Openings and Changes in Ontario

The Ontario border Mayors met with Minister Blair last Thursday to discuss border restrictions and border reopening plans; whatever plans the federal government might have, we desire to participate in those discussions. Border Mayors and council members have received communications from the public expressing views concerning this, all of which is very helpful as we have a dialogue with the federal government.

Minister Blair has indicated that he's open to hearing from the Border Mayors group. He has assured us that his staff will respond to questions as they arise and that there will be continued communication between his office and the Border Mayors group. Mayor Christian Provenzano of Sault-Sainte-Marie heads this particular initiative. Minister Blair expressed appreciation for our comments and outlined the steps that the federal government is contemplating regarding how the border can, or will, be reopened. He also emphasized the importance of health and safety, the importance of testing and isolation, and the federal government's ability to enforce whatever rules it puts into place.

Any easing of restrictions on border crossing will be based on testing, individuals' ability to self isolate once they cross into Canada, and the federal government's ability to monitor and follow up with those allowed to enter the country. Ultimately, our country's residents' health and safety will be kept top of mind. We understand the implications for businesses, families, and those in crisis and will continue to review any opportunities and protocols that could be utilized.

There are conflicting views from border residents on the reopening of international borders. Ultimately, reopening will be phased in, likely target specific groups, and rely on the federal government's ability to monitor and enforce whatever regulations it puts in place.

For Ontario, the Premier announced today that Niagara is scheduled to have the stay-at-home orders lifted next Tuesday. The province will be subject to the colour-coded system, which is being modified as we go forward. The provincial government's challenge is to make sure that the economy doesn't completely stagnate. Where there are opportunities for businesses to operate safely, they should be allowed to do that, always bearing in mind the safety of the residents of Ontario.

One of the highlights from the provincial government's perspective is that most of the individuals in long-term care facilities have now been vaccinated if they want to be vaccinated. In Fort Erie, we are in an

excellent position because all long-term care homes have had their vaccinations. At the end of last week, there was one small outbreak at Gilmore Lodge, one staff member who was quickly isolated. There has been no change in that since then. Today's statistics from the Region show that Fort Erie is now the second-lowest in active cases, and hopefully, we will be able to keep going in that direction. This statistic makes me very proud; our staff and Fort Erie's residents have tried diligently to maintain public health guidelines and worked very hard to ensure that everyone is safe.

I encourage us all to continue to follow health and safety guidelines and ensure that we do what we can to protect those around us. I'm sure we'll get through this. There is more information on a variety of websites. The provincial website is the prime location to get information about the forthcoming changes. The Region and the Town will have that information, as well. The Chamber of Commerce is also putting out that information daily. I encourage individuals who want to stay up to date to keep checking those websites, and you'll be able to get that information. If you need any clarification, you can call the Town and we will try to provide you with that.

Black History Month

Black History Month is a great time to recognize the importance of Black people's contributions to our community. Although we pay special attention to Black History during February, we should continue to recognize their contributions throughout the year. As an important location for the Underground Railroad, Fort Erie has been particularly positively impacted by Black people's contributions to our community. I encourage residents to keep these significant contributions, presently and historically, in mind this month and throughout the year.

Plans for South Niagara Hospital

On Friday, the Niagara Health system, through President, Lynn Guerrero and the Province of Ontario, through the Parliamentary Assistant to the Minister of Health, MPP, Robin Martin and the MPP, Sam Oosterhoff, from Lincoln-Grimsby area, announced that the Province is moving forward with a request for qualifications for the new South Niagara Hospital. That was an extremely important step, moving forward with respect to that facility. One of the questions that was asked was what is the cost of this new building going to be? It is going to be a billion dollars. It will be state-of-the-art facility and will provide much greater access for the residents of Fort Erie to hospital services that are currently available only at St. Catherine's in Niagara Falls. This new facility will be located just off of the Queen Elizabeth Highway, at Lion's

Creek Road. For residents of Fort Erie, it will be quite easy to access. Unfortunately, there were no timelines given as to when construction will start; this is only a request for qualifications, for companies that can do a design build and operation of the facility.

4. Declarations of Pecuniary Interest

Councillor Butler declared a pecuniary interest with respect to:

(a) Item No. 8.2 Report No. PDS-12-2021, as she an investor in a cannabis farm and the report relates to Cannabis.She abstained from discussing and voting on the matter.

Councillor Dubanow declared pecuniary interests with respect to:

(a) Item No. 7.2 Report No. PDS-10-2021 regarding Peace Bridge Village Phase 2 – Stages 1, 2 & 3 Subdivision Agreement Pre-Servicing Approval, as he lives in a subdivision developed by Ashton Homes (Western) Limited that has not yet been transferred to the municipality. He abstained from discussing and voting on the matter; and
(b) Item No. 8.3 (a) being a Memorandum by Paul Chudoba, Coordinator, Law Enforcement regarding a draft Animal Welfare Protection and Control By-law, as the company he works for has performed contracted services for the Fort Erie SPCA and an Animal Welfare, Protection and Control By-law may impact their operations. He abstained from discussing the matter.

Mayor Redekop declared pecuniary interests with respect to:

(a) Item No. 7.2 Report No. PDS-11-2021 regarding Extension of Draft Plan Approval for Hershey Estates Subdivision as he represents, as a lawyer, a client who is attempting to enforce a judgement against the named principal of the Applicant developer (1314566 Ontario Inc.). He abstained from discussing and voting on the matter; and
(b) Item No. 8.2 Report No. PDS-12-2021 regarding 2043 Garrison Road Site Plan, as he represents a client that may be affected by provisions/policies relative to site plans for cannabis production facilities. He abstained from discussing and voting on the matter.

5. Notice of Upcoming Public Meetings

(a) 2021 Budget Meeting Schedule

Budget By-laws: Monday, February 22, 2021 – General Levy Budget By-law and General Capital Budget By-law.

6. Public Meetings

None.

7. Consent Agenda Items

7.1 Request to Remove Consent Agenda Items

Report Nos. PDS-10-2021 and PDS-11-2021 were removed from the Consent Agenda to be dealt with separately, due to the declared pecuniary interests of Councillor Dubanow and Mayor Redekop, respectively.

7.2 Consent Agenda Items for Approval

PDS-10-2021 Peace Bridge Village Phase 2 - Stages 1, 2 & 3 - Subdivision Agreement and Pre-Servicing Approval - West Side of Arthur Street, South of Garrison Road - Ashton Homes (Western) Limited (Aldo Vercillo) and Park Lane Home Builders Limited (Debbie Hill)

That: Council authorizes the entry into a Subdivision Agreement with Ashton Homes (Western) Limited for the Peace Bridge Village Phase 2 – Stage 1 & 2 Subdivision, and further

That: Council authorizes the entry into a Subdivision Agreement with Park Lane Home Builders Limited for the Peace Bridge Village Phase 2 – Stage 3 Subdivision, and further

That: Council permits the Developers to pre-service the subdivision prior to registration of the Subdivision Agreement subject to receipt of the drawings, security deposit, cash payment, approvals, insurance certificate, and letter of indemnification to the satisfaction of the Town, and further

That: Council authorizes staff to prepare the by-laws to execute the Subdivision Agreements and associated documents.

PDS-11-2021 Extension of Draft Plan Approval - Hershey Estates Subdivision - North Side of Nigh Road, East of Centralia Avenue North - 1314566 Ontario Inc.(Andrew Ferri) - Owner - The Larocque Group (Brent Larocque) - Agent

That: Council extends draft plan approval for the Hershey

Estates draft plan of subdivision until February 21, 2022, and the Owner and Regional Municipality of Niagara Planning and Development Services Department be so advised, and further

That: Council directs that the conditions of approval for the Hershey Estates draft plan of subdivision be amended as detailed in Appendix "6" to Report No. PDS-11-2021, and further

That: Council directs that written notification of the amended conditions is not required due to the minor nature of the changes in accordance with Section 51(47) of the *Planning Act*.

FES-02-2021 Award of Quotation for the Purchase of Firefighter Two-Way Portable Radios

That: Council accepts and approves the quotation submission from BearCom Canada Corp. (Ryan Pryznyk, President) for the supply and programming of firefighter two-way portable radios in the amount of $63,992.46 (including 13% HST), with funding coming from approved Capital Project PORT21. **(Carried)**

IS-05-2021 Award of Tender for Lakeside Road Watermain Replacement - Contract No. ISE-20T-LAKE07

That: Council authorizes the extension of the GHD Group assignment for contract administration and inspection services in the amount of $165,172.10 (including 13% HST), and further

That: Council amends the 2021 Capital Budget to substitute Sanitary Sewer Refurbishing Reserve funding with the Combined Sewer Overflow (CSO) grant funds to capital project LAKE07 in the amount of $123,300, and further

That: Council accepts the tender submission for the Lakeside Road Watermain Replacement - Contract No. ISE-20T- LAKE07 from Peters Excavating Inc. in the amount of $4,064,707.18 (including 13% HST). **(Carried)**

IS-06-2021 Award of Tender for 2020 Road Reconstruction - Sunset Drive, Gilmore Road and Bowen Road - Contract No. ISE-20T-RCON20

That: Council amends the 2021 Capital Budget to supplement the 2020 Road Reconstruction - Sunset Drive, Gilmore Road and Bowen Road - Contract No. ISE-20T- RCON20 by $325,000 with funding from the Road Refurbishing Reserve, and further

That: Council accepts the tender submission for the 2020 Road Reconstruction - Sunset Drive, Gilmore Road and Bowen Road - Contract No. ISE-20TRCON20 from Anthony's Excavating Central Inc. in the amount of $1,762,293.65 (including 13% HST). **(Carried)**

Consent Agenda Recommendation

Recommendation No. 1
Moved by: Councillor Dubanow

That: Council approves the Consent Agenda Items as recommended, save and except Report Nos. PDS-10-2021 and PDS-11-2021. **(Carried)**

7.3 Items Removed to be Dealt with Separately

PDS-10-2021 Peace Bridge Village Phase 2 - Stages 1, 2 & 3 - Subdivision Agreement and Pre-Servicing Approval - West Side of Arthur Street, South of Garrison Road - Ashton Homes (Western) Limited (Aldo Vercillo) and Park Lane Home Builders Limited (Debbie Hill)

Recommendation No. 2
Moved by: Councillor Noyes

That: Council authorizes the entry into a Subdivision Agreement with Ashton Homes (Western) Limited for the Peace Bridge Village Phase 2 – Stage 1 & 2 Subdivision, and further

That: Council authorizes the entry into a Subdivision Agreement with Park Lane Home Builders Limited for the Peace Bridge Village Phase 2 – Stage 3 Subdivision, and further

That: Council permits the Developers to pre-service the subdivision prior to registration of the Subdivision Agreement subject to receipt of the drawings, security deposit, cash payment, approvals, insurance certificate, and letter of indemnification to the satisfaction of the Town, and further

That: Council authorizes staff to prepare the by-laws to execute the Subdivision Agreements and associated documents.
(Carried)

Mayor Redekop gave the Chair to Councillor Noyes due to his declared pecuniary interest.

PDS-11-2021 Extension of Draft Plan Approval - Hershey Estates Subdivision - North Side of Nigh Road, East of Centralia Avenue North - 1314566 Ontario Inc.(Andrew Ferri) - Owner - The Larocque Group (Brent Larocque) - Agent

Recommendation No. 3
Moved by: Councillor Zanko

That: Council extends draft plan approval for the Hershey Estates draft plan of subdivision until February 21, 2022, and the Owner and Regional Municipality of Niagara Planning and Development Services Department be so advised, and further

That: Council directs that the conditions of approval for the Hershey Estates draft plan of subdivision be amended as detailed in Appendix “6” to Report No. PDS-11-2021, and further

That: Council directs that written notification of the amended conditions is not required due to the minor nature of the changes in accordance with Section 51(47) of the *Planning Act*. **(Carried)**

Councillor Noyes returned the Chair to Mayor Redekop.

8. Planning and Development Services

Chaired by Councillor Dubanow

8.1 Presentations and Delegations

None.

8.2 Reports

PDS-12-2021 2043 Garrison Road, Fort Erie - Site Plan Agreement - South Side of Garrison Road, West of Laur Road - 2552078 Ontario Ltd. (Xue Hu Huang)

Recommendation No. 4
Moved by: Councillor Lubberts

That: Council authorizes the entry into a Site Plan Agreement with 2552078 Ontario Ltd. for the development of a medical marihuana production facility at 2043 Garrison Road, and further

That: Council authorizes staff to prepare a by-law to execute the Site Plan Agreement and associated documents.

Recommendation No. 5
Moved by: Councillor McDermott

That: Report No. PDS-12-2021 be postponed to the April 12, 2021 Council-in-Committee meeting. **(Carried)**

8.3 New Business/Enquiries

Councillor Dubanow gave the Chair to Councillor Zanko due to his declared pecuniary interest.

(a) Memorandum - Paul Chudoba, Coordinator, Law Enforcement - Draft Animal Welfare Protection and Control By-law

Councillor Zanko asked Ms. Dolch to read the Memorandum. There were no comments or questions.

Councillor Zanko returned the Chair to Councillor Dubanow.

Mayor Redekop advised of an Announcement he meant to make under the Announcement Section of the Agenda. The Minutes reflect the Agenda, as printed; accordingly, the announcement is recorded in Section 3 of these Minutes.

8.4 Business Status Report

No changes.

9. Infrastructure Services

Chaired by Councillor Lubberts

9.1 Presentations and Delegations

None.

9.2 Reports

IS-04-2021 Niagara Transit Governance Report Summary

Recommendation No. 6
Moved by: Councillor Dubanow

That: Council approves the recommendations contained in Report No. IS-04-2021, and further

That: Council directs that Report No. IS-04-2021 be forwarded to the Regional Clerk as feedback to Regional Report No. LNTC-C 4-2020, as requested prior to February 28, 2021, and further

That: Council requests that the Niagara Region consider this feedback and further refine the governance and financial models, in advance of the initiation of the triple-majority process in Q2 2021, and further

That: Council supports, in principle, the Full Commission as the recommended governance model for the consolidation of Niagara's public transit system subject to further review of the recommendations from this Council. **(Carried)**

IS-07-2021 Fort Erie Water Distribution System 2020 Annual Water Quality Report & Annual Water Utility Summary Report

Recommendation No. 7
Moved by: Mayor Redekop

That: Council receives the Annual Water Quality Report for the period of January 1 – December 31, 2020, on Fort Erie's Water Distribution System, attached as Appendix '1', prepared as required by O. Reg. 170/03 Section 11, and further

That: Council receives and accepts Report IS-07-2021 as the Annual Water Utility Summary Report to Council as required by O. Reg. 170/03 Schedule 22. **(Carried)**

IS-08-2021 2020 Road Condition Assessment & Proposed Three-Year Resurfacing Plan

Recommendation No. 8
Moved by: Councillor Zanko

That: Council receives Report No. IS-08-2021 regarding the 2020 Road Condition Assessment and Proposed Three-Year Resurfacing Plan for information purposes. **(Carried)**

9.3 New Business/Enquiries

(a) Response to Enquiry

Re: Enquiry by Councillor Zanko at the December 7, 2020 Council-in-Committee Meeting regarding the condition of the end of Buffalo Road (design and resurfacing).

Mr. Walsh read into the Minutes the Response to Enquiry which is appended to the Agenda.

(b) Response to Enquiry

Re: Enquiry by Councillor Zanko at the December 7, 2020 Council-in-Committee Meeting regarding the timelines concerning Lakeside Road.

Mr. Walsh read into the Minutes the Response to Enquiry which is appended to the Agenda.

(c) Councillor Butler

Councillor Butler advised that a few years ago, Jeremy Inglis and an individual from the YWCA brought to Council's attention the human trafficking problem that exists in the Niagara Region. She continued that last week there was an article in the paper regarding individuals who allegedly were responsible for local human trafficking of individuals under the age of 18. She, Jeremy Inglis, and the YWCA, were working towards fundraising approximately $100,000, but were sidetracked because of COVID last year, and they hope to resume the fundraising.

Councillor Butler asked if the CAO could arrange for the police liaison to present to Council with respect to human trafficking in Niagara so that Council may have a better understanding as to how Niagara municipalities can develop a Taskforce to address the problem.

Mr. Kuchyt advised that he could, and added that when the presentation was made a few years ago, Council made a commitment of $5,000 to help with the Program, which he believed spearheaded other municipalities to do the same. He will invite the police to make another presentation to Council.

9.4 Business Status Report

No changes.

10. Corporate and Community Services

Chaired by Councillor McDermott

10.1 Presentations and Delegations

None.

10.2 Reports

None.

10.3 New Business/Enquiries

None.

10.4 Business Status Report

No changes.

11. Scheduling of Meetings

- Traffic Coordinating Committee, Wednesday, February 24, 4:00 p.m. via Zoom
- Open House, Lions Douglas Heights Senior Residence Development, Official Plan Amendment and Zoning By-law Amendment, Thursday, February 11, 5:00 p.m. via Zoom

12. Adjournment

Recommendation No. 9
Moved by: Councillor Dubanow

That: Council-in-Committee hereby adjourns at 7:50 p.m. **(Carried)**

_____
Mayor

_____
Clerk

The Municipal Corporation of the Town of Fort Erie

Special Council Meeting Minutes

Monday, February 8, 2021

Council Chambers via Video Teleconference

Due to the COVID-19 Pandemic and the Closure of Town Hall
All electronic meetings can be viewed at:
Town's Website:
https://www.forterie.ca/pages/CouncilAgendasandMinutes
Town's YouTube Channel: www.youtube.com/townofforterie
or click on the YouTube icon on the home page of the Town's website (www.forterie.ca) or Cogeco TV

1. Call to Order

Mayor Redekop called the meeting to order at 5:02 p.m.

2. Roll Call

Present (In Council Chambers): His Worship Mayor Redekop

Present (Via Zoom Teleconference): Councillors Butler, Dubanow, Lubberts, McDermott, Noyes, and Zanko

Also Present for Closed Session (Via Zoom Teleconference):
T. Hanrahan, Lancaster, Brooks & Welch, LLP

Staff (Via Zoom Teleconference): K. Dolch, J. Janzen, T. Kuchyt, E. Melanson, C. Schofield, and K. Walsh

This meeting was held in compliance with the electronic participation provisions of Council Rules of Procedure By-law No. 36-2016, as amended.

3. Announcements/Addenda

None.

4. Declarations of Pecuniary Interest

None.

5. Correspondence

Resolution No. A
Moved by: Councillor Noyes
Seconded by: Councillor Dubanow

That: Council Receive & Support correspondence from the City of Welland, urging the Provincial Government to immediately allocate more Pfizer Vaccines to Niagara and restore the allocation of Moderna.

(Carried)

6. Closed Session

Resolution No. 1
Moved by: Councillor Noyes
Seconded by: Councillor McDermott

That: Council does now go into closed session at 5:05 p.m. to discuss the following:

(a) Pursuant to Subsection 239 (2) (e) of the *Municipal Act. 2001* - Litigation or potential litigation, including matters before administrative tribunals, affecting the municipality or local board

Re: Alliston Woods Draft Plan of Subdivision - Appeal of Draft Conditions - Minutes of Settlement

Mayor Redekop asked each member that was in attendance electronically to confirm no one else was present with them, and that they were not recording this portion of the meeting. Each member confirmed they were alone and not recording the meeting, as did Mayor Redekop.

Ms. Dolch delivered a PowerPoint presentation and Mr. Hanrahan provided additional comments, which was followed by a question and answer period with members of Council. Council gave direction to staff.

Resolution No. 2
Moved by: Councillor Zanko
Seconded by: Councillor Butler

That: Council does now rise and reconvene from closed session at 6:07 p.m. with report that staff proceed as directed. **(Carried)**

7. Consideration of By-laws

11-2021 To Confirm the Actions of Council at its Special Meeting Held on February 8, 2021

Resolution No. 3
Moved by: Councillor Butler
Seconded by: Councillor McDermott

That: By-law No.11-2021: To Confirm the Actions of Council at its Special Meeting held on February 8, 2021 is given first and second reading. **(Carried)**

Resolution No. 4
Moved by: Councillor Lubberts
Seconded by: Councillor McDermott

That: By-law No. 11-2021 is given third and final reading to be signed by the Mayor and Clerk under the corporate seal. **(Carried)**

8. Adjournment

Resolution No. 5
Moved by: Councillor Dubanow
Seconded by: Councillor Noyes

That: Council adjourns at 6:09 p.m. to reconvene into a Regular Meeting of Council on February 22, 2021. **(Carried)**

_____
Mayor

_____
Clerk

Town of Lincoln

4800 SOUTH SERVICE RD
BEAMSVILLE, ON L0R 1B1
905-563-8205

RECEIVED
FEB 22 2021
BY COUNCIL

February 8, 2021

SENT VIA EMAIL

Region of Niagara
1815 Sir Isaac Brock Way
P.O. Box 1042
Thorold, ON L2V 4T7

Attention: Ann-Marie Norio, Regional Clerk

RE: Town of Lincoln Council Resolution - Explore Options for Securing Recycling Bin Contents.

Please be advised that Council for the Corporation of the Town of Lincoln at its Special Council Meeting held on February 8, 2021 passed the following motion:

Moved by: Councillor Dianne Rintjema; Seconded by: Councillor J.D. Pachereva

WHEREAS The Council of the Town of Lincoln has as one of the four pillars of its overarching Community Vision, a priority of ensuring that the Town of Lincoln remain a resilient community through initiatives such as championing environmental stewardship and smart growth by continuing to build public awareness and understanding of its shared responsibility to conserve and protect the environment;

AND WHEREAS There have been numerous consistent concerns in recent years from residents regarding items escaping recycling bins particularly on windy days, ultimately littering local private and public property including fields, woodlands, and lakes and streams and as a result having long term, far reaching negative environmental/health and related financial impacts;

AND WHEREAS The Regional Municipality of Niagara recently successfully implemented changes to its waste collection program with goals of diverting away from landfills those items that can be recycled or composted, saving natural resources, and reducing impact on climate change;

AND WHEREAS The Council of the Town of Lincoln, through its established strategic priority of championing environmental stewardship and commitment to conserving and protecting the environment, aims to and build on the success of the initiatives undertaken by the Regional Municipality of Niagara by looking into measures that will not only protect the natural environment by securing recycling bin contents, but that will also have the effect of assisting with the diversion of recyclable items from our landfills.

THEREFORE, BE IT RESOLVED THAT Council of the Town of Lincoln request that the Niagara Region continue to conduct research regarding the feasibility of a pilot project to assist with the securing of recycling bin contents and share results from the 2019 study, including an analysis of the related operational considerations, and also considering funding options such as identifying a local corporate community sponsor.

CARRIED

Regards,

Julie Kirkelos
Town Clerk
jkirkelos@lincoln.ca

cc: Local Area Municipalities

ADR CHAMBERS

Integrity Commissioner Office
for the Town of Fort Erie

EDWARD T. MCDERMOTT
Integrity Commissioner
Town of Fort Erie
Email: integrity@adr.ca

February 16, 2021

SENT BY EMAIL TO:

Carol Schofield
Manager, Legislative Services/Clerk
Town of Fort Erie
cschofield@forterie.ca

Re: Complaint Reference Number I.C. - 12149-1220

Dear Ms. Schofield:

I wish to advise you that I have now completed my investigation into this Complaint and have determined that no contravention of the Town's Code of Conduct was committed by the Councillor with respect to the matters raised in the Complaint.

A draft copy of the detailed Report with respect to this matter has been provided to the Complainant and the Councillor for their information on February 11, 2021.

The process which was followed to investigate this Complaint is recorded in detail in my Report which is attached hereto. It is my recommendation that this Report be placed before Council in open session as the contents of the Report and my

Received by
FEB 22 2021
COUNCIL

determination of the issues do, in my view, have significance and will provide future guidance for Members of Council and the public.

I would also advise that, in accordance with section 223.6 (2) of the Municipal Act, 2001 of Ontario, all matters disclosed in the Report are necessary for the Report itself.

In accordance with section 23 (4) (b) of the Code, I would ask you to refund the Application Fee to the Complainant at your earliest convenience.

This matter is accordingly now concluded.

Yours very truly,

Edward T. McDermott
Integrity Commissioner, Town of Fort Erie

C.C. Ms. Vail
Councillor Lubberts

ADR CHAMBERS

Integrity Commissioner Office
for the Town of Fort Erie

EDWARD T. MCDERMOTT
Integrity Commissioner
Town of Fort Erie
Email: integrity@adr.ca

February 16, 2021

SENT BY EMAIL TO:

Councillor Don Lubberts dlubberts@forterie.ca

Ms. Jamielee Vail [redacted]

Re: Councillor Don Lubberts Complaint IC- 12149-1220

Dear Ms. Vail and Councillor Lubberts:

1.0 Background to the Complaint

On December 3, 2020, the Clerk of the Town of Fort Erie (the "Town") forwarded to my office a Complaint and Request for an Investigation relative to allegations that Councillor Don Lubberts had acted in contravention of section 7-9 (d) of the Code of Conduct for Members of Council of the Town.

The Complainant Jamielee Vail, (the "Complainant") is a former volunteer of the Fort Erie Society for the Prevention of Cruelty to Animals ("SPCA"), which is a Corporation incorporated pursuant to the laws of Ontario (in 1954) as a non share capital and not for profit organization. The Corporation has a Board of Directors (The "Board") consisting of 7 Directors one of whom is Donald Lubberts, a Councillor of the Town.

Councillor Lubberts has been elected to Fort Erie Municipal Council (the "Council") continuously since 2010. He has also served on the Board of the SPCA between 2010 - 2014 and again between October 2015 to date. At all times he has held this position by reason of being "appointed" to it by resolution of Council at the invitation of the SPCA as the "Representative of Council" on the Board.

The SPCA has for some years been party to an agreement with the Town to (inter alia) provide animal control, licensing and Poundkeeper services within the Town limits. There has been some ongoing controversy about the performance of the SPCA in general and with respect to its obligations under the agreement with the Town which was brought to the fore by a number of delegations to Council during its meeting of November 16, 2020. The Complainant in this matter, Ms. Vail, was prominent amongst the presenters in cataloguing (in a Video Presentation), her views on the shortcomings of the SPCA in discharging its responsibilities to the Town under the contract and making several recommendations for change. The Representations of Ms. Vail were responded to by Dr. Arthur King (a professional veterinarian), the President of the Fort Erie SPCA.

As time did not permit the conclusion of this matter on November 16, 2020, a Special Meeting of Council was called for Wednesday November 18, 2020 for the purpose of reviewing the relationship between the Town and the SPCA under the contract (which was terminable by either party on 90 days notice).

At that meeting a motion was tabled by Councillor Butler to terminate the contract with the SPCA on at least 90 days notice with a view to re-tendering it.

During the course of this meeting, Councillor Lubberts (who was at the time a Member of the Board of Directors of the SPCA) advocated in favour of retaining the services (and contract) with the SPCA for the balance of the contract period (i.e. until May 31, 2022 when it would be re-tendered in any event). The matter was brought to a vote which was tied at 3 for the motion to terminate and 3 against it (including Councillor Lubberts). The motion was accordingly lost and the contract between the SPCA and the Town therefore remains in place.

The Complainant takes issue with this result and asserts that the Councillor should, as a Member of the Board of Directors of one of the parties to the agreement, have declared a conflict of interest and withdrawn from any discussion or consideration of the matter before Council and, in particular, refrained from voting on the motion to terminate the contract.

The nature of the Complaint by Ms. Vail was reasonably succinct and to the point and is set forth in its entirety as follows:

> "To whom it may concern,
>
> My name is Jamielee Vail, and I am submitting this letter to the Integrity Board to raise my concern, as I feel that Councillor Lubberts has acted unethically in regard to a recent matter raised before the Town of Fort Erie Council.
>
> First, there was a motion to terminate the contract with the Fort Erie SPCA before Town council, which Councillor Lubberts exercised his vote. However, it is my belief that Lubberts was ineligible to vote on this issue due to a clear conflict of interest. (November 18th special council meeting YouTube starts at 1 minute and 43 seconds in to the meeting)
>
> I have recently obtained a Corporation Profile Report for the Fort Erie SPCA, which I have included with this letter for your review. On page 5 of the report, Lubberts is listed as a current Director on the board, a position he has held since 2012. In light of this information, Lubberts decision not to abstain from the vote is a textbook case of cronyism. (other dates where Lubberts makes comments showing this behavior can be viewed on zoom meetings on YouTube on Monday November 16th 2020 starting at 1 hour 45 minutes and 31 seconds and October 19th 2020 1 hour 20 minutes and 31 seconds and August 24th 2020 1 hour 10 minutes and 36 seconds)
>
> Secondly, I had communicated with Lubberts on several occasions before the vote took place. On our first interaction he agreed that changes need to be made at the SPCA, but he warned me not to share my concerns with anyone else on the Council. (March 16, 2020 somewhere between 5pm and 7pm) This seemed highly suspicious in light of his position on the SPCA board. The next conversation he raised his voice and said only Art King can call a meeting. As there was no response to my concerns, I contacted Councillor Lubberts for the third time (March 23rd 2020 through email at 1:53pm with no response until a phone call on March 26th 2020 somewhere between 5pm and 7pm). During this call his response to each question was to repeatedly ask if I had been contacted by the SPCA. It was shortly after our last conversation, I then received a letter from a lawyer representing the SPCA board. It was a cease and desist letter, which Lubberts must have been aware was coming.

> In my opinion these are not the actions of a man who is representing his constituents, rather they are the actions of a man who is using his political power to protect himself and his colleagues.
>
> It is my sincere hope that you will look into this matter and take the appropriate actions.
>
> Respectfully,
> Jamielee Vail."

In her affidavit in support of this Complaint, (and as required by section 23 (3)(d) of the Code) Ms. Vail enumerated in her Complaint only section 7-9 (d) of the Code as being the source of the contravention by Councillor Lubberts. That section provides as follows:

"9. Members of Council: . . .

d) Must avoid conflict of interest"

2.0 <u>Jurisdiction/Mandate Issue</u>

As can be seen from the Complaint itself (which is reproduced above) reference is made to a number of exchanges the Complainant had with Councillor Lubberts in March 2020, where she concluded/inferred he was not properly addressing or responding to her concerns about the performance of the SPCA.

The Councillor in his Response to this part of the Complaint took issue with Ms. Vail's recollection and characterization of the exchanges between the two of them as catalogued in the Complaint. His Response to these issues was as follows:

> "2. During our initial conversations Ms. Vail told me that there were other people that had concerns about the SPCA which she also stated on Facebook, I tried to explain that with her relaying these stories they were in my opinion hearsay. I needed the people to write out their concerns personally and sign them. I would then bring them to the board of directors of the SPCA. Ms. Vail explained that the other people may have concerns about confidentiality and some may worry about retribution. I told Ms. Vail to have her people provide her with the written concerns and to put them in an envelope marked "Confidential". I would provide them to the board and explain the importance of maintaining

the confidentiality. Ms. Vail did exactly that and we made arrangements for me to pick up the envelope at her house. Before I passed these letters off to the SPCA board members Ms. Vail sent the exact same letters to the Mayor and Council without declaring them confidential. I never told her not to share the letters with the other members of Council. Ms. Vail can share anything with members of Council and anyone in the public. I was merely trying to help protect the people that were worried about confidentiality and retribution. However I did contact Ms. Vail to explain that she had lost the confidentiality of these letters which she acknowledged. I also did not want Ms. Vail to hold me responsible if the letters got out into social media.

3. Two years ago I had open heart surgery. It took me well over a year to recover. During my conversations with Ms. Vail I was still dealing with a particular issue that happened during my surgery. The breathing tube had caused some paralysis of my vocal cords. I was having difficulty when I spoke. These difficulties made my voice rise sometimes when I spoke. I tried to explain this to Ms. Vail and l thought she understood.

4. I told Ms. Vail that I would contact the president of the SPCA and have him call a meeting to discuss Ms. Vail's allegations. I did not say that only Art King could call this meeting. I did however try to explain to Ms. Vail that there was a protocol that should be followed and that I would request that Art King call a meeting. As a board member I don't feel I have the authority to call a meeting. As you can see in Ms. Vail's complaint this was all taking place around March of 2020. This is when Covid 19 was just starting to spread in Ontario and the rest of the world. I don't need to explain the restrictions that the province mandated which included the holding of meetings and group gatherings. In a conversation with Ms. Vail I explained that it was being difficult to meet with the board members and asked that she be patient. I don't need to explain the chaos that Covid 19 created. I do recall asking the question as to whether Ms. Vail had been contacted by the SPCA but I do not recall asking the question repeatedly. There was some discussion among the board members about sending Ms. Vail a letter from the SPCA legal counsel. I didn't know if the letter was sent to her or not so I asked if she had been contacted by the SPCA. If she was that's fine if she wasn't that's fine too."

In her Reply to the Councillor's written Response, Ms. Vail disputed the facts and positions advanced by the Councillor relative to these exchanges and asserted his statements and conduct during this period in March, 2020 were clearly an attempt to "intimidate" and "bully" her into silence. She also indicated in her Reply that she

believes she has been marginalized as a woman and as an advocate for animal welfare as a result of the Councillor's conduct during these exchanges.

Following receipt of the Councillor's Reply, efforts were made to see if the matter could be concluded at that point but such a resolution did not prove achievable and the investigation proceeded.

I then engaged in telephone interviews with each of the parties in order to give them the opportunity to make any further submissions they wished. During the interview with Ms. Vail she invited me to speak with her husband who was present as a witness during some (or all) of the telephone conversations with the Councillor that she takes issue with. I declined that invitation at the time and for the reasons set forth below, I subsequently determined it was not necessary to pursue this path.

While clearly the parties have different versions of these exchanges and their intent and effect, it is not, in my view, necessary to explore this issue any further. Quite apart from the fact that no section of the Code was identified in the Complaint as having been contravened by these incidents, the subject matter of the events of March 2020 do not (and cannot) constitute a contravention of the Code as they are substantially outside the time limits specified in the Code for registering a Complaint against a Councillor.

Section 22 (2) of the Code sets forth certain prescriptive time limitations on when a Complaint can be filed. It provides as follows:

"22. **Complaint - General . . .**

2. Any organization, employee, or member of the public having reasonable grounds to believe that a member has breached this Code, may proceed with a complaint. **Complaints must be submitted within six (6) weeks of the matter becoming known to the individual and no more than one (1) year after the alleged violation occurring. No action shall be taken on a complaint received beyond these deadlines."**

Clearly under this section the Councillor's comments and actions in March, 2020 cannot be considered to give rise to a contravention of the Code by the Councillor, since the Complainant was a party to all of the exchanges which occurred more than eight months before this Complaint was filed. They are accordingly only received as background information to the substance of her Complaint.

3.0 Analysis and Decision

It remains however to consider the main element of Ms. Vail's Complaint, i.e. that by participating in the discussion and vote on the motion before Council (on November 18, 2020) to cancel the Town's contract with the SPCA, the Councillor contravened the provisions of section 7-9 (d) of the Code by reason of being in a conflict of interest with respect to the matter before Council.

The foundation of the position of the Complainant as set forth in the Complaint (see supra) is that, because the Councillor was a Member of the Board of the SPCA at the time the motion came before Council, he should have declared the conflict and abstained from participating in the debate and vote on the issue.

The Councillor's Response to this aspect of the Complaint was as follows:

> "… I have consulted with my lawyer with respect to voting on issues at Council meetings regarding the SPCA. My lawyer is of the opinion that I do not have a conflict of interest. As part of the Animal Control contract with The Town of Ft. Erie a member of Council is selected to sit as a board member on the SPCA board of directors. That member of Council is appointed by Council not the SPCA. During my first term of Council 2010-2014 I was the Council representative on the SPCA board. My second term of Council 2014 2018, Councillor Butler was appointed by Council. Councillor Butler resigned and I resumed my place as Council representative. I am currently the representative on the board. I think it should be noted that I am not selected by the SPCA nor am I voted onto the board by the SPCA. I am appointed by Council and the SPCA plays no role in that selection process. The SPCA board consist of 5 members, and a Council representative. The board members are Art King president, Julie Ayres vice president, Mary Reinhart secretary, Dawn St, Angelo treasurer, Connie Nowles director, Dawn Roberts director, and Don Lubberts Town representative. Wendy Trombley is the SPCA manager."

Ms. Vail did not accept that position and (in her Reply) amplified her position in the following terms:

> **"1. Conflict of Interest**
>
> According to the Town of Fort Erie municipal conflict of interest act, any member of council who has either direct or indirect pecuniary interest in a matter is required to refrain from discussing or voting on any issues related to the matter.

> The definition of indirect pecuniary interest within the act describes any individual who is part of a body that has pecuniary interest, regardless of the individual's personal benefit. The fact that Councillor Lubberts was appointed to the SPCA Board by council is irrelevant according to the conflict of interest act. The Fort Erie SPCA had a monetary interest in the vote that was brought before council, and as a director on the board Councillor Lubberts was required to recuse himself from discussing or voting on any matter pertaining to the SPCA as outlined in section 2 of the conflict-of-interest act. It is also pertinent to point out a misleading statement made by Councillor Lubberts in his response to my complaint. In part 1 of his reply Lubberts classifies his position on the SPCA board as a "council representative" but on their corporation profile report he is listed as a board director and he is on the deed for the SPCA building. This statement is only one of a series of lies told by Councillor Lubberts that I will be detailing within this response. In addition to the conflict-of-interest act, it is my opinion that Lubberts violated multiple statutes in section 4 of the Fort Erie municipal code of conduct. Specifically, subsections pertaining to the misuse of the influence of office, conflicts of interest, and performance of duties in such a way as to inspire public confidence. Councillor Lubberts actions regarding this matter do not inspire public confidence and in my opinion are a disturbing misuse of his position."

From the foregoing, it is clear that it is the view of the Complainant that both the law (the Municipal Conflict of Interest Act (MCIA)) and the Code preclude the Councillor as a Board Member of a Corporation that has a pecuniary interest in a matter before Council, from participating in the discussion and vote on that issue. The Complainant has dismissed the fact that the Councillor was "appointed" to the position as Council's representative on the Board as being irrelevant to the conflict of interest issue.

In my view that is a restrictive and unsupportable view of the structure of the MCIA and the Town's Code.

There is certainly no doubt on the facts that the SPCA had a pecuniary interest in the motion before Council to terminate its contract with the Town. There is also no issue that the Councillor was a member of the Board of the SPCA at the time the motion came before Council. Those two facts viewed in isolation might suggest that the Councillor had a conflict of interest with respect to this matter.

That however is a restrictive and ill-founded response to this situation and completely ignores the fact that the Councillor's position on the Board was only as a result of being asked by Council to serve as its representative at the request of the SPCA to appoint a

Member of Council to its Board. Indeed, in its own minutes, the Board of the SPCA refers to Councillor Lubberts as the "Representative of Council" to the Board.

The MCIA is the relevant statutory regime which regulates pecuniary interests by Councillors and provides some substantial guidance to this issue. It is true that section 2 of the MCIA attributes an "indirect pecuniary interest" to a Member of Council if the member is a Director of a corporation that has a pecuniary interest in the matter before Council. The relevant part of that section provides as follows:

2. **Indirect pecuniary interest**

For the purposes of this Act, a member has an indirect pecuniary interest in any matter in which the council or local board, as the case may be, is concerned, if,

(a) the member or his or her nominee,

(i) is a shareholder in, or a director or senior officer of, a corporation that does not offer its securities to the public. . .

that has a pecuniary interest in the matter. . ."

If such a pecuniary interest exists (direct or indirect) sections 5 and 5.2 preclude the Councillor affected from participating in the discussion or vote on the matter before Council and prevents him/her from attempting to influence the voting on such questions. The relevant statutory provisions are as follows:

"Duty of Member
When present at meeting at which matter considered

5 (1) Where a member, either on his or her own behalf or while acting for, by, with or through another, has any pecuniary interest, direct or indirect, in any matter and is present at a meeting of the council or local board at which the matter is the subject of consideration, the member,

(a) shall, prior to any consideration of the matter at the meeting, disclose the interest and the general nature thereof;

(b) shall not take part in the discussion of, or vote on any question in respect of the matter; and

(c) shall not attempt in any way whether before, during or after the meeting to influence the voting on any such question. R.S.O. 1990, c. M.50, s. 5 (1).

Where member to leave closed meeting

5 (2) Where the meeting referred to in subsection (1) is not open to the public, in addition to complying with the requirements of that subsection, the member shall forthwith leave the meeting or the part of the meeting during which the matter is under consideration. R.S.O. 1990, c. M.50, s. 5 (2)."

The position of the Complainant in this matter is that as a Director of the SPCA which had a pecuniary interest in the matter before Council at the meetings on November 16 and 18, 2020, the Councillor had an indirect pecuniary interest by virtue of these sections of the MCIA and was thus acting in contravention of the MCIA and section 7-9 (d) of the Code when he participated in the discussion and vote on whether the contract with the SPCA should be cancelled by Council.

Such an analysis has some logic as far as it goes but fails to consider the fact that the Councillor was an "appointee" to this external Board as the "Representative of Council" and at the request of the SPCA. The provisions of the MCIA (section 4) provide for eleven exceptions to the application of sections 5 and 5.2. One of those exceptions is section 4 (h) which provides as follows:

Exceptions
"4 Where section 5 does not apply

Sections 5 and 5.2 do not apply to a pecuniary interest in any matter that a member may have . . .

(h) by reason only of the member being a director or senior officer of a corporation incorporated for the purpose of carrying on business for and on behalf of the municipality or local board **or by reason only of the member being a member of a board, commission, or other body as an appointee of a council or local board**. . ."

In my view, by enacting this exception, the Legislature recognized that municipalities are often asked to appoint Members of Council as their representative to various Boards/Committees or Associations (e.g. a BIA). Indeed, there is even legislation which enables municipalities to appoint Councillors to independent (non-local) Boards (e.g. the Public Libraries Act or the Conservation Authorities Act) in order to assist the Boards in their relationship with Council (which may well be their primary funder).

Such interaction is often beneficial to both Council and the Board to which the Councillors are appointed as there is an ongoing and important exchange of information and relationships which would not otherwise exist. It benefits the municipality and the external agency immensely and is an indispensable part of how municipal government works with the community and allocates its support and funding. The Legislature has recognized the importance of enabling these relationships by excepting them from the provisions of section 5 of the MCIA.

I also note that the Code itself requires Councillors who are appointed by Council to such bodies to participate diligently in their appointed roles as part of their duties as a Councillor. Section 7-9 (b) speaks to this matter as follows:

"7 (9.) Members of Council. . .

(b) When appointed to committees and other bodies as part of their duties must make every effort to participate diligently in these bodies with good faith and care. . ."

It is my view (by extension) that by accepting such an appointment by Council and participating in the Board's activities, a Councillor does not automatically become invested with a conflict of interest which precludes him/her from discharging his/her duties and responsibilities as an elected Member of Council with respect to matters that might come before it affecting the Corporation.

While it may be that situations could arise which place the appointed Councillor in a conflict of interest situation (e.g. if he/she personally had a pecuniary interest in the matter), on the facts of this case, there is no suggestion Councillor Lubberts personally has a pecuniary interest in the contract between the SPCA and the Town or that his judgement and independence have been compromised by serving the wishes of Council in accepting an appointment as the representative to this Board.

The reference in Ms. Vail's Reply to the assertion the Councillor is "on the Deed" for the SPCA building was, upon review with Ms. Vail, more of a misinterpretation of the Government's Corporation Profile Report than an assertion that Mr. Lubberts had an ownership interest in the building occupied by the SPCA. The Councillor denies any such proprietary or financial interest in the building and there is no evidence to support such a finding.

It is accordingly my view that by accepting an appointment to the Board of the SPCA at the request of Council, Councillor Lubberts did not relinquish his role as a Member of

Council to participate in issues before Council involving the SPCA, including the motion to terminate its contract with the Town which was brought before Council on November 16 and 18, 2020.

I accordingly find that there has been no contravention of the MCIA or section 7-9 (d) of the Code as asserted by the Complainant.

In writing this Decision, I would be remiss if I failed to acknowledge that I believe that the Complainant presented her position with genuine concern and passion for the animals which are at the root of this Complaint and nothing in this Report should be taken as a criticism of her personally or for her actions in advancing this cause.

For the foregoing reasons, this Complaint is therefore dismissed. This matter is accordingly now concluded.

Edward T. McDermott
Integrity Commissioner, Town of Fort Erie

Attendance:

Board Members Present: Councillor Marina Butler, Don Irvine, Patty Mountain, Rob Faragalli, Sarah Chevalier

Regrets: Karen Arbour (technical difficulties)

Staff: Jennifer McCready, Victoria MacDonald

Membership: n/a

1) Call to Order:

Meeting was called to order at 3:23pm due to technical difficulties with zoom

2) Roll Call:

Councillor Marina Butler, Don Irvine, Patty Mountain, Rob Faragalli, Sarah Chevalier, Jennifer McCready, Victoria MacDonald

3) Welcome, Announcements & Addenda:

The Chair welcomed everyone. Rob pointed out the achievement attained by the Fort Erie Waterfront Strategy & Bay Beach. They were awarded the Grand Prize and Outstanding Achievement by the Niagara Biennial Design Awards for the best overall project out of 8 categories and 68 submissions. The project was Bay Beach being transformed into an accessible and inclusive Waterfront Park while protecting the natural environment.

4) Acceptance of the Agenda:

Motion to accept the agenda issued for January 13, 2021 *Motion: Councillor Butler, 2nd: Rob Faragalli, carried*

5) *Acceptance of the Previous Minutes:*

Motion to accept the minutes of the Regular Board Meeting November 11, 2020 *Motion: Rob Faragalli, 2nd: Sarah Chevalier, carried*

6) *Correspondence:*

Secretary to ask for information from BBIA chair.

7) Reports:

Treasurer: Don will get the "grant" package ready and send to the EDTS for 2020.

Market: Victoria has the Market applications ready for board review, we decided not to raise the fees for 2021.

Events: The Christmas event was a huge success, thank you everyone who helped put this on.

Valentines Day, Sarah, Don, Jennifer & Karen will run with getting hearts ready, virtual sales and hang hearts in trees.

Easter Saturday, April 3rd, Rob and Sarah will organize this event, secretary will check with Town / EDTS on paperwork needed.

Marketing: Jennifer is full steam ahead on promoting Ridgeway and thanking everyone for supporting our village. She is helping businesses without social media presence to get their info out.
Rob has the billboard schedule for 2021 ready to go, he will coordinate with the events happening.
Maintenance: offer from John Arbour to rent the BIA sea container space for all of our belongings so they can be in one place close to the downtown core. Patty will contact Karen and John regarding cost.
Beautification: the barrel liners in the square are the property of the Mill. They will be removed in the spring and be brought back full of our summer flowers. Discussion regarding lights to be strung across the street year-round came up again, Rob explained it is very expensive and needs engineering involved. We will keep brain storming on lighting up our community.
Councillor Butler: Marina informed us of the final approval for the Boardwalk at Bernard Beach, we discussed signage at the boardwalk to get people to come to the downtown. Marina also mentioned Bay Beach as an opportunity for Greater Fort Erie to have signage for all the business areas of the Town. Councillor Butler suggested we invite the EDTS to our next meeting in February for discussion on many topics. Rob will do that. Rob mentioned that we need to also find a way to have more support from the Town with regard to logistics of events. The board thanks Marina for her generous donation of Christmas decorations for 2021.

8) Action Items and Discussions:

Need more board members.

9) Motion(s) to be presented:

That the RBIA Board of Management recommends to Council the appointment of Tyler B Chevalier property owner, to the Ridgeway Business Improvement Area Board of Management
Motion: Rob Faragalli, 2nd: Marina Butler, carried

That the RBIA Board of Management recommends to Council the appointment of John Arbour property owner, to the Ridgeway Business Improvement Area Board of Management
Motion: Patty Mountain, 2nd: Sarah Chevalier, carried

That the RBIA Board of Management accepts the contract with Lamar Advertising for Billboard advertising in 2021 at the same price as 2020. *Motion: Rob Faragalli, 2nd: Marina Butler, carried*

Special note: Sarah Chevalier has accepted the request by the board to be vice-chair.

10) Adjournment and Next Meeting:

The next RBIA general meeting will be Wednesday **February 3, 2021 at 3:30 pm** via Zoom.

Minutes prepared by:

Patty Mountain Secretary

Minutes approved by:

Rob Faragalli, Chair

Attendance:

Board Members Present: Patty Mountain, Rob Faragalli, Sarah Chevalier, Karen Arbour

Regrets: Councillor Butler, Don Irvine

Staff: Jennifer McCready, Victoria MacDonald

Membership: n/a

1) Call to Order:
Meeting was called to order at 3:41pm via zoom

2) Roll Call:
Karen Arbour, Patty Mountain, Rob Faragalli, Sarah Chevalier, Jennifer McCready, Victoria MacDonald

3) Welcome, Announcements & Addenda:
The Chair welcomed everyone.

4) Acceptance of the Agenda:
Motion to accept the agenda issued for Feb 3, 2021 *Motion: Rob Faragalli, 2nd: Sarah Chevalier, carried*

5) *Acceptance of the Previous Minutes:*
Motion to accept the minutes of the Regular Board Meeting January 13, 2021 *Motion: Sarah Chevalier, 2nd: Rob Faragalli, carried*

6) *Correspondence:*
C of C invoice for membership, we do not belong. Email from Daniel at EDTS regarding Easter event

7) Reports:
Treasurer: Chair would like banking organized and brought to CIBC
Market: Victoria has stated she does not need a cell phone. Decide to sell it or keep it.
Events: Easter Saturday, April 3rd, Rob and Sarah will organize this event.
Marketing: Jennifer is full steam ahead on promoting Ridgeway and pushing curbside shopping and take out. Rob will come up with a "Colourful Springtime" theme for the next billboard
Maintenance: we will reserve decision on accepting Johns offer for renting storage space.
Beautification: n/a
Councillor Butler: Rob relayed message from Marina of Lions Club offer to fund raise for washrooms. Rob will attend the meeting.

8) Action Items and Discussions:
Need more board members.

9) Motion(s) to be presented:

That the RBIA Board of Management supports the Easter event being planned for April 3, 2021 in the municipal lot.
Motion: Sarah Chevalier, 2nd: Patty Mountain, carried

10) Adjournment and Next Meeting: Meeting was adjourned at 4:03 pm.
The next RBIA general meeting will be Wednesday **March 3, 2021 at 3:30 pm** via Zoom.

Minutes prepared by:

Patty Mountain Secretary

Minutes approved by:

Rob Faragalli, Chair

Crystal Beach BIA

AGM Minutes

Meeting Date, Time, and Location
Wednesday January 20th, 2021 at 6:00 pm, via ZOOM online meeting
Members Present
Rick Boivin, Phil Smith, Sandra Lyons, Kirk Fretz, Robin Bannerman, Carol McKay Regrets: Mayor Wayne Redekop

1) **Call to Order**

Call to order at 6:04pm

2) **Roll Call**

3) **Disclosures of Pecuniary Interest**

n/a

4) **Approval of Agenda**

Motion to approve the 2021 AGM agenda as presented/amended.

Moved by Phil Smith, seconded by Robin Bannerman - carried

6) **Approval of Minutes**

Motion to approve AGM minutes from December 18th, 2019 as presented/amended.

Moved by Rick Boivin, seconded by Robin Bannerman - carried

7) **Agenda Items**

Motion to approve the 2021 Budget as presented / amended.

Moved by Kirk Fretz, seconded by Phil Smith - carried

8) **Next Meeting Date and Adjournment**

Next meeting is TENTATIVELY scheduled for Tuesday March 2nd 2021 at 6:00pm.

Motion to adjourn.

Meeting adjourned at 6:35pm. Moved by Kirk Fretz, seconded by Rick Boivin - carried

Planning and Development Services

Prepared for	Regular Council	**Report No.**	PDS-13-2021
Agenda Date	February 22, 2021	**File No.**	350308

Subject

PLANNING AND DEVELOPMENT SERVICES – DEVELOPMENT, BUILDING AND BY-LAW STATISTICAL REPORTING – FOURTH QUARTER AND YEAR-END 2020

Recommendations

THAT Council receives Report No. PDS-13-2021 regarding development, building and by-law statistical reporting for information purposes, and further

THAT Council directs staff to forward a copy of Report No. PDS-13-2021 to the Regional Planning and Development Services Department, the Fort Erie Economic Development and Tourism Service, the District School Board of Niagara and the Niagara District Catholic School Board.

Relation to Council's 2018-2022 Corporate Strategic Plan

Priority: Attracting interest and investment through strong advocacy and promotion
Strong Customer Service, Relationships and Communications
Goal 3.2: Improve Fort Erie's reputation as a vibrant, liveable community with competitive investment advantages.
Priority: Promoting Business, Economic Growth and Employment Opportunities
Goal 4.5: Promote service excellence and efficiency/effectiveness.

List of Stakeholders

Land Owners / Developers
Region of Niagara
School Boards
Fort Erie Economic Development and Tourism Service

Prepared by:	Submitted by:	Approved by:
Original Signed	*Original Signed*	*Original Signed*
Holly Galloway Administrative Assistant, Planning and Development Services	Kira Dolch, MCIP, RPP Director, Planning and Development Services	Tom Kuchyt, CET Chief Administrative Officer

Purpose of Report

The purpose of this report is to provide data for the 2020 fourth quarter (Q4) and 2020 year-end performance relative to subdivision, building permit and by-law activity, and further provide comparative information to assist in assessing and illustrating the activity.

Background

This report tracks and examines the residential, commercial, industrial and institutional building permit activity, related development charge information and the Town's By-law Enforcement caseload by way of quarterly and year-end status reports.

This reporting assists staff in monitoring new development and intensification occurring throughout the Town, thereby assisting in the Town's growth management initiatives. The data allows staff to compare growth in relation to growth targets and unit projections based on approved land use in the Town's Official Plan, Secondary and Neighbourhood Plans. The reporting identifies areas where residential activity is occurring and reports on actual permits drawn for each Neighbourhood Area. The report also supplies a breakdown of residential dwelling types/mix being constructed.

All levels of government share an interest in tracking this data for comparative purposes, particularly when it is used to gauge effectiveness of the Provincial Growth Plan and Regional Growth Management Plan. These growth numbers have and will continue to be used to inform the Niagara Region and will also be useful in review of their current Growth Management exercises in correlation to Provincial Plans, particularly that of the Places to Grow.

Analysis

Residential Dwelling Permit Report Q4-2020 (Section A of Appendix "1")

New Permit Overview

The information supplied in this report will be used to generate data for the annual Statistical Reporting requirements and the Financial Information Return for the municipality. **Section A** of **Appendix "1"** contains results that are charted and illustrated.

The Q4 2020 was strong with 65 permits issued for new residential with a permit value of $27,266,800. The permit value and number of permits tends to be high in the Q4, but normally below the permit value and number of permits when compared to the average Q3. In comparison, the 2020 Q3 permits for new residential consisted of 86 permits with a permit value of $36,352,800.

The Q4 2020 is slightly higher in value, but lower in the number of permits issued than the Q4 2019 which consisted of 73 residential permits with a value of $27,217,200. The data from the fourth quarter also shows that in comparison to all quarters since 2016,

the fourth quarter turned out the third highest permit value for residential permits. The highest permit values were turned out in the Q3 2020 and the Q4 2016. The highest number of permits issued were in the Q4 2016 (89), Q3 2020 (86) and Q3 2018 (79). The COVID-19 pandemic has not caused a decrease in permit activity.

In terms of the year-end statistics for 2020, there were a total of 243 permits issued for new residential dwellings, which included 184 single-detached homes, 2 semi-detached dwellings, and 57 multi-unit/apartment/towns. The value of the new residential permits in 2020 is $99,260,000, which is the highest total for a year-end. The closest comparator for new the value of residential permits issued was 184 residential permits with a value of $88,304,600 in 2019. The month of November 2020 had the highest number of residential permits (35) issued and in the year of 2020 the highest number of residential permits (45) were issued in September.

Over the last few years, new residential permit activity has been dominated by development in the Ridgeway-Thunder Bay neighbourhood. After some surges in other parts of Fort Erie (Stevensville and Spears-High Pointe mostly), Ridgeway-Thunder Bay again represents the highest number of permits issued, holding 32% or 21 of the new residential permits issued in Q4 2020. The remaining permits for new residential buildings issued in the Q4 2020 were represented by Douglastown 17% (12 permits), Spears-High Pointe (11 permits) and Crystal Beach (11 permits) each represented 16% of new residential permits issued in the Q4. These were followed with permits for new residential building issued in the Q4 in Rural (5 permits), Stevensville (3 permits), Bridgeburg (1 permit) and Lakeshore (1 permit).

The year-end data shows that the highest number of permits for new residential buildings was issued in Ridgeway-Thunder Bay with 94 permits or 38% of all permits issued in 2020. Spears-High Pointe represented 51 permits or 20% of all permits issued in 2020. This shows that more than half of all permits for new residential were issued in Ridgeway-Thunder Bay and Spears-High Pointe neighbourhoods. In addition, Douglastown represents 35 or 14% of the residential permits issued in 2020 and Crystal Beach represents 28 or 11% of the residential permits issued in 2020.

It is important to recognize that the number of permits issued does not always coincide with the number of units created. A permit issued for an apartment building could result in numerous dwelling units, while a permit for a single detached dwelling with an accessory apartment could result in two dwelling units. In the fourth quarter a total of 69 units of housing were created, including four dwelling units under the category of accessory apartment.

In Q4 2020 the final numbers for types of dwelling units created were 68% single-detached dwellings, 26% towns/row house and 6% apartments (accessory apartment). No permits issued for semi/duplex or mobile homes.

The year-end results for 2020 for types of dwelling units created were 73% single-detached dwelling, 23% townhouse/row house, 3% apartments and 1% semi/duplex. No permits issued for semi/duplex or mobile homes.

Subdivision Plan Registrations

There was one subdivision, Black Creek Signature, registered this quarter. There were a high number of Plan Registrations in 2018 that is likely the result of the development community responding to the extremely low inventory at that time. Council may recall that the inventory of buildable lots in registered plans of subdivision and condominium had reached a low 1.4 years' worth of supply in 2018, but that now increased to a comfortable 3.7 years' worth. At the end of the Q4 2020 there were 825 units available in Registered Plan which is up from the 694 in the Q3 2020.

Draft Plans of Subdivision

The fourth quarter of 2020 saw the South Coast Village Condominium added to the Draft Approved Plans. Currently, there are 15 approved Plans of Subdivision that are in various stages of clearing conditions of their respective approval.

Present supply provides for 1668 new residential units in approved Plans of Subdivision with a healthy mix of 383 detached, 200 semi-detached and 1058 multiple unit dwellings (towns & apartments).

Presently, the available supply of residential lots in Draft Approved Plans of Subdivision is equal to 7.6 years using the 5 year rolling average of 220.8 units/year of absorption.

Active Plans

Active Plans simply refer to Draft Plan applications currently in the process for Council consideration.

There are five active plans cited in Table 4 of **Appendix "1.** Harbourtown Village remains on this list despite having received Council's approval. Due to an appeal of the decision, Harbourtown will remain under Active Plans until such time that a decision of the Local Planning Area Tribunal is rendered.

Four of the Active Plans (613 Helena, Royal Ridge Phase 2, Brydgeview Townhouse Condominium and Peace Bridge Village Phase 3) have held their statutory Public Meeting and have additional information to provide prior to Council's consideration. At this time it remains unclear when 613 Helena will be moving forward with respect to the additional required information. Recommendation reports are imminent for Royal Ridge Phase 2, Brydgeview Townhouses and Peace Bridge Village Phase 3.

The five plans represent a total of 685 residential units, comprised of 445 townhomes and apartment units, 113 single detached and 127 semi-detached units. Presently, the available supply of residential lots in Active Plans of Subdivision is equal to 3.1 years using the 5 year rolling average of 220.8 units/year of absorption.

Residential Inventory

The residential supply reported in the previous 3 categories *(Registered, Draft Approved and Active Plans)* is representative of a lean but healthy housing supply.

The absorption rate used in determining how long these supplies will last is generated using the previous 60 months (5 years) worth of building permits issued to generate an average. The average is adjusted quarterly to produce an ongoing or rolling average covering a consistent 60 month period. If permit activity increases, the amount of years' worth of supply reflects this with a decrease. Currently, the average residential uptake is 220.8 units per year.

At the time of reporting on this fourth quarter of 2020, using the current average for annual absorption (220.8), the respective inventories are as follows:

- Registered Plans – 825 units at 220.8 units/year = 3.2 years' worth of supply;
- Active Plans – 685 units at 220.8 units/year = 3.5 years' worth of supply.

In general terms, the Town is still in a healthy position with its current inventory for residential supply.

Industrial / Commercial / Institutional (ICI) Permit Activity and Development Charge Collections Q4 and Year End – 2020 (Section B of Appendix "1")

Industrial

Industrial permit activity was low during the fourth quarter of 2020. Typically permit activity in the fourth quarter is over 1 million dollars with an average of two permits. This Q4 saw three permits issued for New Industrial with a value of $90,000. One additional permit was issued for Addition/Renovation/Alterations with a permit value of $18,000. In comparison, the 2019 Q4 saw two permits issued with a value of $1,505,000. To compare permit activity over previous Q4's the highest was for two permits in 2017 with a value of $1,720,000.

Industrial permit values for the year-end of 2020 totaled $1,233,200 and consisted of three permits for New Industrial with a value of $90,000 and six permits for Additions/Alterations with a permit value of $1,143,200. The highest year-end for all Industrial permits was in 2018 when there were 6 permits issued with a permit value of $27,135,000.

Commercial

There was a respectable amount of commercial permit activity in the Q4 that saw four permits issued for a total of $1,024,000. This included Additions/Alterations to existing commercial buildings valued at $224,000 and two permits for New Commercial with a permit value of $800,000. Included in the new commercial permits were permits for two new restaurants. In comparison, the 2019 Q4 saw a total of four permits issued with a

value of $280,500. Prior to 2020, the highest Q4 was for five permits with a commercial permit value of $1,054,000 in 2016.

Commercial permit values for the year-end of 2020 totaled $5,972,700 and consisted of six permits for New Commercial with a value of $2,950,000 and 21 permits for Additions and Alterations with a permit value of $3,022,700. The highest year-end for all Commercial permits was in 2018 when there were 44 permits issued with a permit value of $7,234,300.

Institutional

There were no Institutional permits issued in the fourth quarter. Institutional permit activity in the fourth quarter can waiver. The 2019 Q4 consisted of 4 permits with a total permit value of $3,040,000. The highest permit activity for Institutional permits in a Q4 was in 2015 with three permits and a permit value of $23,031,000.

Institutional permit values for the year-end of 2020 totaled $6,510,000 and consisted of four permits for New Institutional with a value of $6,200,000 and six permits for Additions/Alterations with a permit value of $310,000. The highest year-end for all Institutional permits was in 2015 when there were 13 permits issued with a permit value of $31,491,000.

Charting for all permits and values can be found in **Appendix "1"** to this report.

Industrial/Commercial Development Charges (DC's)

The fourth quarter of 2020 saw four Commercial permits that resulted in the collection of Town development charges. One permit in October resulted in $28,747.91 in Town DC's and three permits in December resulted in a total of $34,114.61 in Town DC's. This shows for a total of $62,862.52 in Town DC's. The DC's were collected for an indoor recreation building, A&W Restaurant, Starbucks and Taco Bell.

2020–Q4 By-law Statistical Reporting Section C of Appendix "1"

Section Overview

A straight forward statistical approach is used for tracking the volume and type of municipal by-law complaints received. By-law Enforcement staff monitor action and activity and this quarterly report conveys the statistics in a summary form.

For the period of October-December 2020, By-law Enforcement received 451 new calls for service and there were 255 calls carried over from the previous quarter. By-law Enforcement was able to resolve 73% of the total calls for service of 706 total calls.

The demand for municipal enforcement services continues with a dramatic increase. Compared to Q4 2019 there was a 137% increase in By-law enforcement calls for service and a 175% increase compared to Q4 in 2018. The ability to cope with the significant increase in call volume was possible by retaining the temporary part-time By-

law Enforcement officer, who started working in August of 2020 originally to assist with COVID-19 related matters, parking, and beach road allowance patrols.

Table 7 in Appendix “1” shows the number of calls that were carried over from the Q3, the number of new calls for service, the number of resolved calls and the number of calls that are pending (not resolved before the end of the quarter) in nine different categories. In the Q4 2020 there were 451 calls for service compared to Q4 2019 where there were 191 new calls for service. This is an increase of 261 calls in a three month period. As Graph 9 in Appendix “1” shows, the largest increase in calls to By-law Enforcement in the fourth quarter came under the COVID-19 category. A total of 157 calls related to COVID-19 were received this quarter, which is significant increase from the 52 calls that were received in Q3. This is a deviation from the norm since typically the highest number of calls are under the categories of Waste and Debris, Property Standards and Long Grass and Weeds.

New calls in other categories were consistent with the number of calls received in the Q4 2019. New calls in the Miscellaneous category increased from 46 in the Q4 2019 to 88 in Q4 2020. Long Grass and Weed calls were consistent with 2 called in Q4 2019 and 1 call in Q4 2020. Zoning related calls up in Q4 2020 to 25 from 15 in Q4 2019 and Noise calls remained steady in Q4 2020 to 17 from 14 in 2017. New calls for service for Property Standards issues were down from 79 in Q4 2019 to 69 in Q4 2020.

In the Q4 2020 Miscellaneous calls represented 19% of the calls, Property Standards accounted for 15% of all new calls. Waste and Debris accounted for 11% of calls and Long Grass and Weeds accounted for less than 1% of all calls. Calls for Zoning represented 6% and Noise calls represented 4%. Calls for COVID-19 related issues peaked at 35% of all incoming calls for service. Calls for service for parking related issues accounted for 10% of the calls and Short-Term Rental issues represented 0% of the calls for service

Two new categories were added to the By-law Quarterly statistics in the third quarter of 2020 that included parking and short term rental related calls. There were 23 calls concerning short term rentals in the Q3, but that dropped to zero calls received in the Q4. There were 46 calls for service regarding parking infractions in the Q4 which is a drop from the 66 calls for service received in the Q3. Calls for service for parking related issues accounted for 10% of the calls and Short-Term Rental issues represented 0% of the calls for service.

In addition to the Q4 2020 By-Law statistics, the Year-End numbers are illustrated in Table 8. There were a total of 1581 calls for service in 2020 compared to 1164 in 2019. The table shows that the highest number of calls for service (350) in the year 2020 were COVID-19 related calls. Following this, there were 318 calls for service were under the Miscellaneous category. Additionally, there were 298 calls for Waste and Debris, 234 for Property Maintenance and 216 for Long Grass & Weeds. Rounding out the calls for service in 2020 were 121 calls for parking related issues, 80 calls regarding Noise, 85 for Zoning related issues and 23 for Short Term Rentals.

By-law Enforcement issued a total of 67 tickets in the Q4 2020 which is less than the 107 that were issued in the Q4 2019. By-law Enforcement recorded record numbers for penalty notices (parking tickets) in the year of 2020 with a total of 1115 parking tickets issued. The busiest month for parking tickets was August with 530 tickets issued. In 2019 there were a total of 607 parking tickets issued. It is also interesting to note that in April, May and June only one penalty notice was issued (parking in an accessible parking spot without a permit). During the first six months of the year there were only 116 tickets issued. The remainder of the tickets, 999, were issued between July 1 and December 31, 2020.

Table 6 shows that at the end of 2019 there were a total of 1164 new calls and at the 2020 year end there were 1725 new calls for service received, which in an increase of 39% in new calls for service from 2019. In addition the total number of calls for service from 2013 to 2020 was 7401 with a low of 522 calls for service in 522 to a high of 1581 calls in 2020.

With respect to COVID-19 related matters in Q4, the Niagara Region Health Unit went from Yellow, to Orange, to Red, to Grey, and then to a provincial lock-down near the end of the year. This resulted in a significant amount of resources dedicated towards responding to citizen complaints, and assisting the community with compliance. During the period, close to 100 pro-active business inspections were performed, with the primary focus of assisting local businesses in achieving compliance as the stages transitioned, and providing on site guidance and Q&A's. No tickets, fines, or charges were laid during the Q4 period under the provincial emergency orders.

In an effort to continue to enhance service delivery to the public, and to reduce contact with other Town staff, two By-law enforcement vehicles have been outfitted with equipment to maximize the amount of time officers are in the field, and increase the ability to address matters on site. Replacing a paper-based ticketing process, By-law officers are now equipped with tablets and printers, and can issue penalty notices for both parking and non-parking offences, which are uploaded electronically to a database. After uploaded, the ability to dispute or pay the penalty notice online is available within a very short time after being issued. Additionally, all By-law enforcement responses can now be updated in the field, providing instant updates regarding the status of a file. The mobile technology affords the ability for By-law officers in the field to be notified if a complaint is generated, and if the opportunity is available such as already being in the area, can potentially address a matter such as property standards shortly after being received.

The next stage of enhancements is currently underway, where By-law officers will have the ability to print off an Order to Comply in the field, delivering residents with an instant formal document, identifying deficiencies and the remedies required to address an issue. This eliminates turnaround time, and the same equipment can be utilized for addressing matters of non-compliance by issuing a penalty notice if required.

The breakdowns are found in **Section C** of **Appendix "1"** which conveys the volumes under various headings. For a comparison, the 2019 Q4 By-law Enforcement statistics

are shown together with the 2020 Q4 numbers and are found as Tables 7 and 8 and Graph 9 and 10 in **Appendix "1"** to this report.

Overall Quarter and Year-End Summary

The fourth quarter of 2020 is characterized as being strong for residential permits and typical in terms of the industrial, institutional and commercial sectors. Residential construction activity is apparent in many parts of Fort Erie. The fourth quarter was the third highest quarter for value of residential permits, and with many sites being pre-serviced; sales are anticipated to remain strong.

With registered lot inventories at a comfortable level, Staff will track and assess how fast the market responds with sales and whether the impact of available lots can be sustained using the draft approved plans that are approaching registration in the beginning of 2021.

The focus and strength of this year's fourth quarter was on residential permit activity with 65 permits issued for new residential with a permit value of $27,266,800. Overall permit activity is down from the Q3 2020 where there were a total of 207 permits issued with a value of $44,487,975. In the Q4, a total of 157 permits were issued for all building related matters with a total permit value of $35,645,600 which encompasses residential, commercial and industrial new builds and additions/alterations as well as permits for demolitions, plumbing, garages and carports, accessory buildings and swimming pools, signs and tents.

The year of 2020 was a record-breaking year for total permit values. A grand total of 591 permits were issued in 2020 with an overall permit value of $128,717,375. In 2019 the total for the year was 644 permit issued with a value of $107,700,200.

In the year of 2020, By-law Enforcement recorded record numbers for penalty notices (parking tickets) with a total of 1115 parking tickets issued.

Calls for service (complaints) have also increased in 2020. There were a total of 1581 calls for service in 2020 compared to 1164 in 2019. In 2020, the highest number of calls (350) were in the COVID-19 related category. Following this, there were 318 calls for service were under the Miscellaneous category. Additionally, there were 298 calls for Waste and Debris, 234 for Property Maintenance and 216 for Long Grass & Weeds.

Overall, 2020 was an extraordinary year despite the issues caused by the COVID-19 pandemic. 2020 started out typically, but due to the emergence of COVID-19 in the spring there was a definite change in how the department dealt with building permits and by-law calls for service.

The Town of Fort Erie continues to grow and staff continue to strive to meet the needs of the community.

Financial/Staffing Implications

There are no financial or staffing implications as it relates to the preparation of this report. Reporting of this nature is part of the Planning and Development Services normal operational activities and procedures.

Policies Affecting Proposal

N/A

Comments from Relevant Departments/Community and Corporate Partners

Planning, Building and By-law Enforcement divisions were consulted during the preparation of this report. Statistical information relating to each division was provided by staff members who maintain statistics used to monitor and project activity in their relative areas of responsibility. The information conveyed is purely of a statistical nature for Council, stakeholder and public consumption.

Communicating Results

The report is posted on the Town's website for public access and forwarded to key stakeholders for information. No further communication is required at this time.

Alternatives

As this is a recurring Information Report, there are no alternatives to consider.

Conclusion

Planning staff collect the information being reported for their continued monitoring and growth management purposes. The report is made available for public distribution to interested persons, organizations and governments for benchmarking new construction activity in our Residential and IC&I sectors and recording its monetary value.

Attachments

Appendix "1" – 2020 Q4 and Year-End Development, Building and By-law Statistical Report

2020 Q4 and YEAR-END

PLANNING AND DEVELOPMENT SERVICES
DEVELOPMENT, BUILDING AND BY-LAW
STATISTICAL REPORTING

SECTION A

SUBDIVISION STATUS AND
RESIDENTIAL PERMIT REPORT

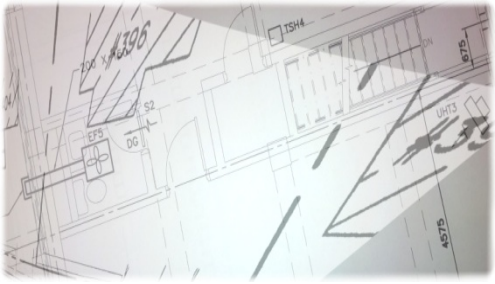

SECTION B

INDUSTRIAL, COMMERCIAL &
INSTITUTIONAL PERMIT ACTIVITY and
DEVELOPMENT CHARGE REPORT

SECTION C

BY-LAW ENFORCEMENT REPORT

Note - This Report is prepared for the information of the Town of Fort Erie Council and overall public consumption. Reporting is of statistical nature only. Analysis is the domain of the reader.

DEVELOPMENT ACTIVITY – 2020 Q4

New Residential Construction

The fourth quarter of 2020 was consistent with a typical Q4 with 65 permits issued for new residential dwellings and a permit value of $27,266,800. In addition, there were also four accessory apartment units created. The highest number of permits were issued in November.

The largest neighbourhood concentration for new residential permit activity is Ridgeway/Thunder Bay neighbourhood with 21 of permits issued in Q4 2020. **Table 1** below shows the residential permit activity by month and location for 2020 Q4.

Table 1

PERMITS ISSUED FOR NEW RESIDENTIAL DWELLINGS- FOURTH QUARTER 2020

(does not include accessory apartments created)

Oct-20	ADDRESS	NEIGHBOURHOOD	TYPE	NO./UNITS	REG PLAN
2020-10-02	3573 DOMINION ROAD	Ridgeway-Thunder Bay	ROW HOUSE	1	PLAN NSVLCP140 LEVEL 1 UNIT
2020-10-02	3573 DOMINION ROAD	Ridgeway-Thunder Bay	ROW HOUSE	1	PLAN NSVLCP140 LEVEL 1 UNIT
2020-10-02	3573 DOMINION ROAD	Ridgeway-Thunder Bay	ROW HOUSE	1	PLAN NSVLCP140 LEVEL 1 UNIT
2020-10-02	3573 DOMINION ROAD	Ridgeway-Thunder Bay	ROW HOUSE	1	PLAN NSVLCP140 LEVEL 1 UNIT
2020-10-02	3651 ALLEN TRAIL	Ridgeway-Thunder Bay	SINGLE HOUSE	1	PLAN 59M465 LOT 7
2020-10-07	3538 CANFIELD CRESCENT	Douglastown-Black Creek	SINGLE HOUSE	1	PLAN 59M451 LOT 56
2020-10-09	324 THORNWOOD AVENUE	Ridgeway-Thunder Bay	SINGLE HOUSE	1	PLAN 486 LOT 45
2020-10-23	140 HETRAM COURT	Crystal Beach	SINGLE HOUSE	1	PLAN 59M349 LOT 14
2020-10-26	150 HETRAM COURT	Crystal Beach	SINGLE HOUSE	1	PLAN 59M349 LOT 12
2020-10-29	159 LINCOLN ROAD EAST	Crystal Beach	SINGLE HOUSE	1	PLAN 27 LOT 84 NP370
TOTAL				**10**	

Nov-20	ADDRESS	NEIGHBOURHOOD	TYPE	NO./UNITS	REG PLAN
2020-11-27	1452 MARINA DRIVE	Spears-High Pointe	ROW HOUSE	1	**PLAN 59M459**
2020-11-27	1456 MARINA DRIVE	Spears-High Pointe	ROW HOUSE	1	PLAN 59M459
2020-11-27	1460 MARINA DRIVE	Spears-High Pointe	ROW HOUSE	1	PLAN 59M459
2020-11-27	1464 MARINA DRIVE	Spears-High Pointe	ROW HOUSE	1	PLAN 59M459
2020-11-27	1468 MARINA DRIVE	Spears-High Pointe	ROW HOUSE	1	PLAN 59M459
2020-11-27	1472 MARINA DRIVE	Spears-High Pointe	ROW HOUSE	1	PLAN 59M459
2020-11-29	1432 MARINA DRIVE	Spears-High Pointe	ROW HOUSE	1	PLAN 59M459
2020-11-29	1436 MARINA DRIVE	Spears-High Pointe	ROW HOUSE	1	PLAN 59M459
2020-11-29	1440 MARINA DRIVE	Spears-High Pointe	ROW HOUSE	1	PLAN 59M459
2020-11-29	1444 MARINA DRIVE	Spears-High Pointe	ROW HOUSE	1	PLAN 59M459
2020-11-29	1448 MARINA DRIVE	Spears-High Pointe	ROW HOUSE	1	PLAN 59M459
2020-11-02	2834 ARROWSMITH COURT	Douglastown-Black Creek	SINGLE HOUSE	1	PLAN 59M451 LOT 29
2020-11-04	275 RIDGE ROAD SOUTH	Crystal Beach	SINGLE HOUSE	1	PLAN 435 LOT 214 PT LOT 213 RP 59R15980 PART 1
2020-11-05	3556 EDINBURGH ROAD	Douglastown-Black Creek	SINGLE HOUSE	1	PLAN 59M451 LOT 80
2020-11-09	163 WESTWOOD AVENUE	Crystal Beach	SINGLE HOUSE	1	PLAN 425 PT LOTS 379 AND 380, RP 59R14210
2020-11-09	157 WESTWOOD AVENUE	Crystal Beach	SINGLE HOUSE	1	PLAN 425 LOT 378 PT LOT 379, RP 59R14210 PART 6
2020-11-11	1720 REBECCA STREET	Rural	SINGLE HOUSE	1	PLAN 456 LOTS 104 TO 106 PT LOT 107 RP 59R16419
2020-11-12	1833 POUND AVENUE	Rural	SINGLE HOUSE	1	PLAN 147 LOT 37 TO LOT 43
2020-11-17	110 RIDGE ROAD NORTH	Ridgeway-Thunder Bay	SINGLE HOUSE	1	PLAN 59M465 LOT 3
2020-11-17	76 BUTLERS DRIVE NORTH	Ridgeway-Thunder Bay	SINGLE HOUSE	1	PLAN 59M455 LOT 68
2020-11-19	201 PLEASANT AVENUE NORTH	Ridgeway-Thunder Bay	SINGLE HOUSE	1	PLAN 436 PT LOTS 337 AND 338
2020-11-21	3352 WHISPERING WOODS TRA	Ridgeway-Thunder Bay	SINGLE HOUSE	1	PLAN 59M455 LOT 53
2020-11-23	2022 STEVENSVILLE ROAD	Rural	SINGLE HOUSE	1	BERTIE CON 11 NR PT LOT 8 RP
2020-11-24	3616 CANFIELD CRESCENT	Douglastown-Black Creek	SINGLE HOUSE	1	PLAN 59M451 LOT 48
2020-11-24	3264 BETHUNE AVENUE	Ridgeway-Thunder Bay	SINGLE HOUSE	1	PLAN 344 LOT 554 PT LOT 555
2020-11-25	3623 THUNDER BAY ROAD	Crystal Beach	SINGLE HOUSE	1	PLAN 59M363 PT BLK 29 RP 59R16011 PART 5
2020-11-25	2301 TOWNLINE ROAD	Rural	SINGLE HOUSE	1	CON 7 NR PT LOT 16
2020-11-26	1625 NIAGARA RIVER PARKWAY	Bridgeburg	SINGLE HOUSE	1	CON CROSS NR PT LOT 4
2020-11-26	106 RIDGE ROAD NORTH	Ridgeway-Thunder Bay	SINGLE HOUSE	1	PLAN 59M465 LOT 5
2020-11-27	3627 THUNDER BAY ROAD	Crystal Beach	SINGLE HOUSE	1	PLAN 59M363 PT BLK 29 RP
2020-11-30	3629 THUNDER BAY ROAD	Crystal Beach	SINGLE HOUSE	1	PLAN 59M363 PT BLK 29 RP
2020-11-30	3620 THUNDER BAY ROAD	Ridgeway-Thunder Bay	SINGLE HOUSE	1	PLAN 59M465 LOT 61
TOTAL				**32**	

SECTION A – 2020 Q4 AND YEAR END - SUBDIVISION STATUS AND RESIDENTIAL PERMIT REPORT

Dec-20	ADDRESS	NEIGHBOURHOOD	TYPE	NO./UNITS	REG PLAN
2020-12-15	13 SASSAFRAS ROW	Ridgeway-Thunder Bay	ROW HOUSE	1	PLAN NSVLCP149 LEVEL 1 UNIT
2020-12-15	13 SASSAFRAS ROW	Ridgeway-Thunder Bay	ROW HOUSE	1	PLAN NSVLCP149 LEVEL 1 UNIT
2020-12-15	17 SASSAFRAS ROW	Ridgeway-Thunder Bay	ROW HOUSE	1	PLAN NSVLCP149 LEVEL 1 UNIT
2020-12-01	3619 THUNDER BAY ROAD	Crystal Beach	SINGLE HOUSE	1	PLAN 59M363 PT BLK 29 RP
2020-12-01	4007 VILLAGE CREEK DRIVE	Stevensville	SINGLE HOUSE	1	PLAN 59M438 LOT 33
2020-12-02	3532 CANFIELD CRESCENT	Douglastown-Black Creek	SINGLE HOUSE	1	PLAN 59M451 LOT 57
2020-12-02	4225 VILLAGE CREEK DRIVE	Stevensville	SINGLE HOUSE	1	PLAN 59M438 LOT 40
2020-12-08	2877 ARROWSMITH COURT	Douglastown-Black Creek	SINGLE HOUSE	1	PLAN 59M451 LOT 84
2020-12-09	3749 DISHER STREET	Ridgeway-Thunder Bay	SINGLE HOUSE	1	PLAN 349 PT LOT 19 W SOUTH
2020-12-10	3609 CANFIELD CRESCENT	Douglastown-Black Creek	SINGLE HOUSE	1	PLAN 59M451 LOT 70
2020-12-10	3621 THUNDER BAY ROAD	Crystal Beach	SINGLE HOUSE	1	PLAN 59M363 PT BLK 29 RP
2020-12-11	3624 THUNDER BAY ROAD	Ridgeway-Thunder Bay	SINGLE HOUSE	1	PLAN 59M465 LOT 59
2020-12-11	112 RIDGE ROAD NORTH	Ridgeway-Thunder Bay	SINGLE HOUSE	1	PLAN 59M465 LOT 2
2020-12-15	18 PARKVIEW AVENUE	Lakeshore	SINGLE HOUSE	1	PLAN 53 NP 393 LOT 3
2020-12-16	4176 VILLAGE CREEK DRIVE	Stevensville	SINGLE HOUSE	1	PLAN 59M438 LOT 22
2020-12-16	114 RIDGE ROAD NORTH	Ridgeway-Thunder Bay	SINGLE HOUSE	1	PLAN 59M465 LOT 1
2020-12-17	4820 GILMORE ROAD	Rural	SINGLE HOUSE	1	CON 15 NR PT LOT 5
2020-12-17	3575 EDINBURGH ROAD	Douglastown-Black Creek	SINGLE HOUSE	1	PLAN 59M451 LOT 81
2020-12-21	2846 ARROWSMITH COURT	Douglastown-Black Creek	SINGLE HOUSE	1	PLAN 59M451 LOT 27
2020-12-21	2773 ARROWSMITH COURT	Douglastown-Black Creek	SINGLE HOUSE	1	PLAN 59M451 LOT 45
2020-12-22	82 BUTLERS DRIVE NORTH	Ridgeway-Thunder Bay	SINGLE HOUSE	1	PLAN 59M455 LOT 67
2020-12-22	3592 CANFIELD CRESCENT	Douglastown-Black Creek	SINGLE HOUSE	1	PLAN 59M451 LOT 52
2020-12-22	2810 ARROWSMITH COURT	Douglastown-Black Creek	SINGLE HOUSE	1	PLAN 59M451 LOT 33
TOTAL				23	

NEIGHBOURHOOD	TOTAL NUMBER OF RESIDENTAIL UNITS
Bridgeburg	1
Business Park - Gilmore	0
Crescent Park	0
Crystal Beach	11
Douglastown-Black Creek	12
Fort Erie	0
Garrison	0
Gateway	0
Kraft	0
Lakeshore	1
Ridgeway/Thunder Bay	21
Spears/High Pointe	11
Stevensville	3
Walden	0
Rural Areas	5
TOTAL	**65**

The chart to the left indicates the neighbourhood where new residential permits were issued.

Graph 1 illustrates the fourth quarter and year-end distribution of new residential permits issued in each neighbourhood by the number of permits issued.

Graph 1

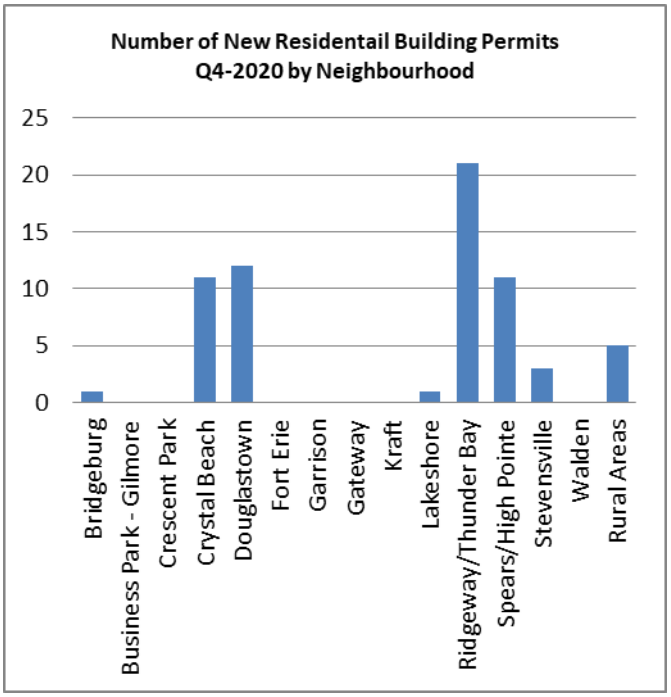

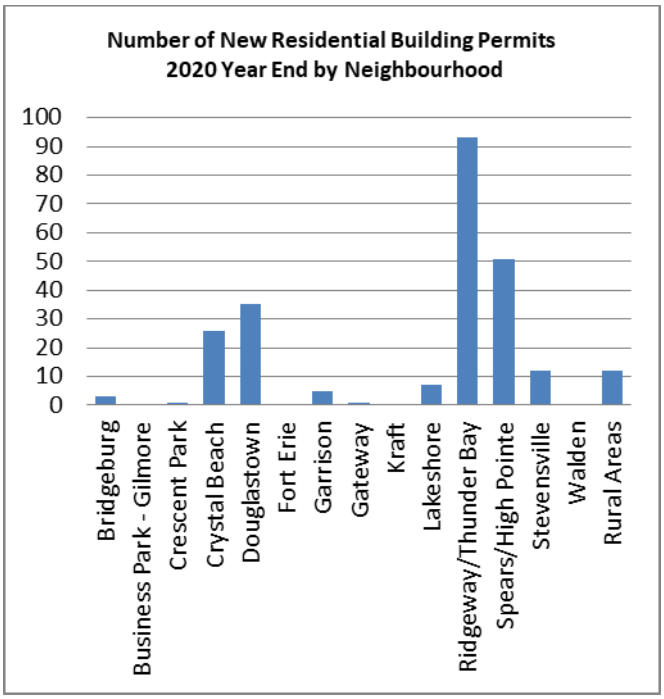

Graph 2 illustrates the type of residential dwellings permits in the fourth quarter of 2020 and the current year-end for comparison.

Graph 2

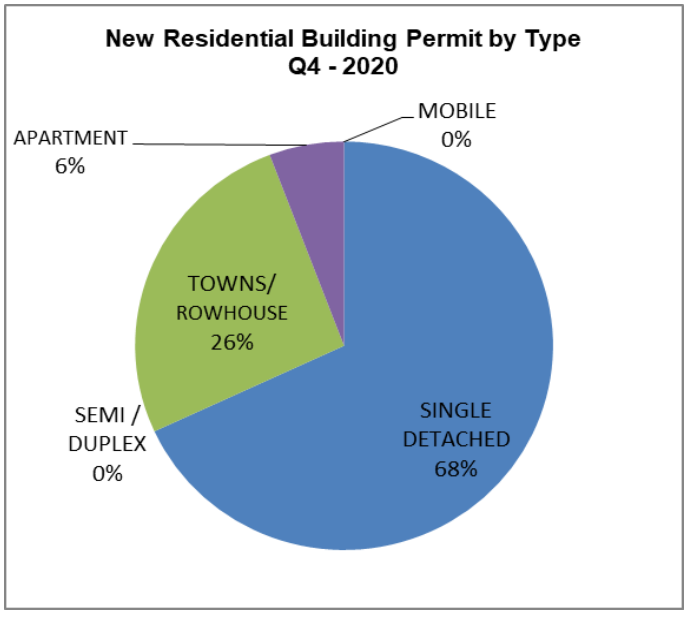

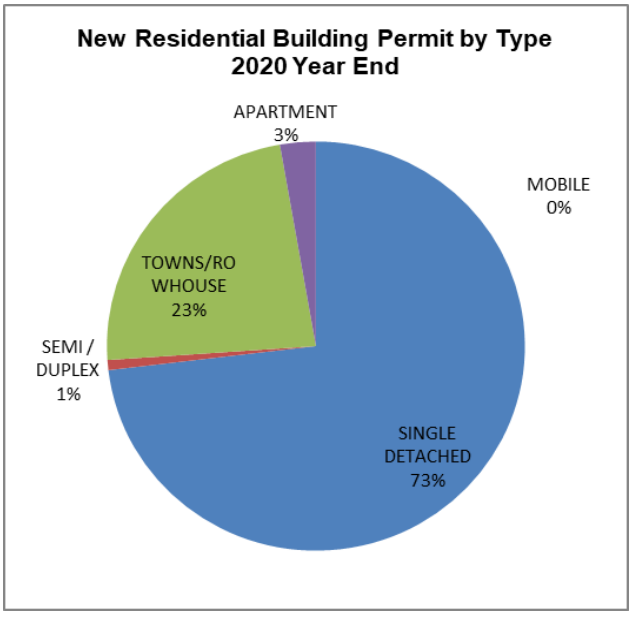

Registered Plans of Subdivision

In the fourth quarter there was one subdivision registration.

With the permits drawn to date on all active developments in Town, the current supply of available dwellings based on a 5-year rolling average absorption rate *(currently 220.8 units per year)* is 3.1 years' worth of inventory.

Table 2 provides the statistical information on Registered Plans, which ones are built out (pink) and which have inventory yet to receive permits (blue).

Table 2

2020 Q4 REGISTERED PLANS OF SUBDIVISION

	Plan Name	Neighbourhood	Reg'd	Reg'l File No.	Date of Reg'n	# of Lots/Blocks	# of Units	Vacant Lots/ Blocks	Potential Units	Vacant Single-Det.	Vacant Semi-Det. Units	Vacant Multiple Units
REGISTERED BUILT-OUT												
B01	DOUGLAS-ON-THE-PARKWAY	Douglastown	M-197	26T-88006	1991-04-08	38	38	0	0	0	0	0
B02	HILL ESTATES NORTH	Stevensville	M-232	26T-91018	1996-10-23	27	27	0	0	0	0	0
B03	CRESCENT FARM EXTENSION I	Crescent Park	M-244	26T-22885	1998-04-16	19	19	0	0	0	0	0
B04	VICTORIA VILLAGE PHASE I	Garrison	M-261	26T-90009	1998-12-21	10	10	0	0	0	0	0
B05	RIVER TRAIL ESTATES II - PHASE I	Douglastown	M-276	26T-	2000-06-07	23	23	0	0	0	0	0
B06	NORTHRIDGE MEADOWS PHASE 1	Ridgeway/Thunder Bay	M-305	26T-15-2001-	2003-02-27	7	7	0	0	0	0	0
B07	NORTHRIDGE MEADOWS PHASE 2	Ridgeway/Thunder Bay	M-313	26T-15-02-03	2003-07-30	44	44	0	0	0	0	0
B08	WELLINGTON COURT CONDOMINIUM	Garrison	NSSCC-65	26CD-15-9901	2001-01-01	1	17	0	0	0	0	0
B09	HENRY-BROWNE SUBDIVISION	Crystal Beach	M-329	26T-15-02-06	2005-02-24	8	8	0	0	0	0	0
B10	BEAVER CREEK ESTATES	Ridgeway/Thunder Bay	M-330	26T-15-02-05	2005-03-09	53	53	0	0	0	0	0
B11	VILLAGE CREEK ESTATES PHASE I	Stevensville	M-347	26T-91013	2006-05-29	40	63	0	0	0	0	0
B12	BAY RIDGE CROSSING PHASE 2	Crystal Beach	M-363	26T-15-2000-01	2007-09-05	26	26	0	0	0	0	0
B13	RIVER TRAIL CONDOMINIUMS	Douglastown	NSVLC-99	350303-0011		10	10	0	0	0	0	0
B14	SHOREBREEZE CONDOMINIUM PLAN	Crystal Beach	VLC-92		2008-09-03	19	19	0	0	0	0	0
B15	HAGEY AVENUE CONDOMINIUM PLAN	Fort Erie	NSC-102		2009-09-17	1	21	0	0	0	0	0
B16	VILLAGE CREEK ESTATES PHASE II	Stevensville	M-390	26T-91013	2012-06-06	40	55	0	0	0	0	0
B17	DEERWOOD LANE PHASE 1	Ridgeway/Thunder Bay	M-397	350308-089	2012-11-08	2	8	0	0	0	0	0
B18	LEXINGTON COURT CONDOMINIUM	Garrison	NSSCP89	26CD-15-04-01	2013-10-18	1	20	0	0	0	0	0
B19	RIDGEWAY-BY-THE-LAKE PHASE I	Ridgeway/Thunder Bay	M-341	26T-96014	2006-01-30	86	86	0	0	0	0	0
B20	RIDGEWAY-BY-THE-LAKE PHASE 2	Ridgeway/Thunder Bay	M-372		2008-09-11	41	70	0	0	0	0	0
B21	RIDGEWAY-BY-THE-LAKE PHASE 3	Ridgeway/Thunder Bay	59M-418	350308-0048	2015-10-02	54	73	0	0	0	0	0
B22	WILLOW TRAIL HOMES	Ridgeway/Thunder Bay	59M-453	350308-075	2018-05-15	4	16	0	0	0	0	0
B23	GARRISON VILLAGE PHASE I	Garrison	M-83	26T-85019	1979-11-26	215	306	0	0	0	0	0
B24	PROSPECT POINT PLAN	Crystal Beach	M-265	26T-91010	1999-03-24	55	55	0	0	0	0	0
B25	VICTORIA VILLAGE 2	Garrison	M-331	26T-90009	2005-03-09	11	11	0	0	0	0	0
B26	DOMINION ROAD ESTATES PLAN	Rural Area	M-333	26T-15-00-01	2005-04-01	7	7	0	0	0	0	0
B27	DOMINION WOODS PHASE 1	Ridgeway/Thunder Bay	M-375 (1)	26T-15-03-01	2008-04-03	24	24	0	0	0	0	0
B28	SPEARS ROAD ESTATES	Spears-High Pointe	59M-419	350308-0380	2015-10-02	40	59	0	0	0	0	0
B29	DOMINION WOODS 2 (CONDOMINIUM)	Ridgeway/Thunder Bay	NSVLCP 141 59M-375 (2)	26CD-15-09-01	2018-07-09	1	51	0	0	0	0	0
B30	BURLEIGH SOUTH PLAN	RidgewayThunder Bay	M-287	26T-		14	14	0	0	0	0	0

SECTION A – 2020 Q4 AND YEAR END - SUBDIVISION STATUS AND RESIDENTIAL PERMIT REPORT

	Plan Name	Neighbourhood	Reg'd	Reg'l File No.	Date of Reg'n	# of Lots/Blocks	# of Units	Vacant Lots/ Blocks	Potential Units	Vacant Single-Det.	Vacant Semi-Det. Units	Vacant Multiple Units
REGISTERED WITH UNITS REMAINING												
R01	JETMAR SUBDIVISION	Crystal Beach	M-65	26T-74259	1978-02-07	54	54	46	46	46	0	0
R02	GARRISON VILLAGE PHASE II	Garrison	M-84	26T-74019	1979-11-26	65	150	6	8	4	0	4
R03	DAYTONA PARK ACRES	Crescent Park	M-155	26T-85019	1989-03-10	15	15	1	1	1	0	0
R04	COUNTRY SQUIRE ESTATES I	Rural Area	M-172	26T-78024	1990-03-08	11	11	2	2	2	0	0
R05	CRYSTAL BEACH Y & T CLUB	Crystal Beach	M-208	26T-91012	1993-04-07	169	169	33	33	33	0	0
R06	NEYE PLAN PHASE I	Outside of Urban Area	M-209	26T-91011	1993-12-09	2	2	1	1	1	0	0
R07	ERIE BEACH PHASE 1A	Lakeshore	M-263	26T-94005	1999-02-08	6	12	1	2	0	2	0
R08	NEYE PLAN PHASE II	Rural Area	M-267	26T-91011	1999-06-21	4	4	1	1	1	0	0
R09	HILL ESTATES SOUTH	Stevensville	M-303	26T-	2002-11-18	36	36	1	1	1	0	0
R10	RIDGEWAY SHORES PHASE 1	Ridgeway/Thunder Bay	M-304	26T-15-9801	2002-12-18	16	16	3	3	3	0	0
R11	ERIE BEACH PHASE 1B	Lakeshore	M-319	26T-94005	2004-03-31	39	46	3	3	3	0	0
R12	BRIAN STREET DEVELOPMENT	Crescent Park	M-BRI	N/A	N/A	46	46	10	10	10	0	0
R13	BAY RIDGE CROSSING 1	Crystal Beach	M-337	26T-15-03-02	2005-07-15	10	10	2	2	2	0	0
R14	BAY BEACH WOODS	Crystal Beach	M-349	26T-15-9803	2006-08-04	32	32	15	15	15	0	0
R15	BAY RIDGE CROSSING PHASE 3	Crystal Beach	M-363	26T-15-03-02	2007	1	9	1	2	2	0	0
R16	SOUTH COAST VILLAGE PHASE 1	Crystal Beach	59M-415	26T-15-09-01	2014-12-12	2	11	2	2	2	0	0
R17	SOUTH COAST VILLAGE PHASE 2	Crystal Beach	59M-430	350308-0087	2016-10-13	48	128	2	83	1	0	82
R18	VILLAGE CREEK ESTATES PHASE 3	Stevensville	59M-438	350308-0099	2017-05-17	59	75	17	28	18	0	10
R19	RIVER TRAIL PHASE 2	Douglastown-Black Creek	59M-451	350308-0042.2	2018-01-25	90	90	53	53	53	0	0
R20	PARKLANE PLACE	Crystal Beach	59M-452	350309-0095	2018-04-25	6	22	4	12	0	2	10
R21	DEERWOOD LANE PHASE 2 (CONDO.)	Ridgeway/Thunder Bay	NSVLCP 140 59M-397	26CD-15-10-01	2018-06-14	5	18	0	0	0	0	0
R22	THE OAKS AT 6 MILE CREEK	Ridgeway/Thunder Bay	NSVLCP 149 59M-455	350308-0085	2018-06-28	81	123	60	89	56	8	25
R23	HIGH POINTE SUBDIVISION	High Pointe	59M-459	26T-15-02-02	2018-08-14	114	139	47	61	45	0	16
R24	BRYDGEVIEW (Fmr. King Albany)	Gateway (Garrison)	59M-464	26T-15-0801	2018-11-28	6	42	2	33	0	0	33
R25	CRYSTAL RIDGE LANDING	Ridgeway/Thunder Bay	59M-465	26T-15-2005-02	2018-12-12	72	72	20	20	20	0	0
R26	LU LONG PING Phase 1 (Fmr. Spears Garden)	Separs-High Pointe	59M-469	26T-85022	2019-05-02	82	103	82	103	76	0	27
R27	PEACE BRIDGE VILLAGE Phase 1	Garrison	59M-470	26T-15-06-02	2019-05-03	70	100	5	30	4	0	26
R28	RIVER LEA ESTATES	Rural Area	NSVLCP 148	350303-0016	2019-01-29	4	3	3	0	0	0	0
R29	BLACK CREEK SIGNATURE	Douglastown	59M-483	350308-0100	Dec-20	138	181	181	181	121	14	46
	TOTALS					**1283**	**1719**	**604**	**825**	**520**	**26**	**279**
	denotes Registered Built-out		**3.7 YEAR SUPPLY OF UNITS IN REGISTERED PLANS**									
	denotes Registered/Units Remaining											

Draft Approved Plans of Subdivision

There was one addition to the list of Draft Approved Plans in the Q4 2020. Presently, the available supply of residential lots in Draft Approved Plans of Subdivision is equal to 7.6 years using the 5-year rolling average of 220.8 units/year of absorption. Table 3 below provides the details on the present Draft Approved Subdivision inventory.

Table 3

Q4 2020 DRAFT APPROVED PLANS

DRAFT APPROVED PLANS OF SUBDIVISION

	Plan Name	Neighbourhood	File No	Draft Approval	Redline Approved	# of Residential Lots/Blks	# of Units	Single-Det. Units	Semi-Det. Units	Multiple Units	Site Area (ha)
D01	ALLISTON WOODS	Spears	26T-15-00-02	8-Feb-01	2015-05-22	177	304	170	0	134	23.56
D02	KETTLE COURT (formerly Levy Crt.)	Lakeshore	26T-15-02-07	23-Sep-03	2010-07-16	12	12	12	0	0	0.84
D03	HERSHEY ESTATES	Rural Area	26T-15-99-02	12-Jan-01	2003-09-15	17	17	17	0	0	14.30
D04	SCHOOLEY ROAD CONDOMINIUMS	Crystal Beach	350303-006	11-Sep-06		53	53	0	0	53	3.94
D05	HAZELWOOD CONDOMINIUMS	Crystal Beach	350309-0293	10-Mar-08		2	12	0	0	12	0.35
D06	CREEKSIDE ESTATES	Ridgeway/Thunder Bay	26T-15-05-	11-Apr-11		31	31	31	0	0	2.43
D07	ABINO DUNES CONDOMINIUM	Point Abino	350308-040/D12-040			27	27	27	0	0	32.97
D08	NIGH ROAD SUBDIVISION	Rural Area	350308-0077	Mar-08		19	19	19	0	0	9.57
D09	ELIZABETH ST. SUBDV. (Fmr. Dantini Plan)	Crystal Beach	350308-0082			28	28	28	0	0	3.18
D10	ROYAL RIDGE	Ridgeway/Thunder Bay	350308-0101	07-Nov-16		14	39	0	12	27	2.61
D11	FORT ERIE HILLS	Bridgeburg	350308-0120	01-May-17		137	900	30	134	736	19.26
D12	LU LONG PING Ph 2 (Fmr. Spears Garden Ph2)	High Pointe	350308-0104	26-Feb-18		8	7	7	0	0	0.43
D13	SOUTHRIDGE MEADOWS	Ridgeway/Thunder Bay	350308-0117	14-Sep-19		58	58	4	54	0	2.24
D14	PEACE BRIDGE VILLAGE PHASE 2	Garrison	305308-0111	04-Jun-20		47	88	38	0	50	4.34
D15	SOUTH COAST VILLAGE CONDOMINIUM	Crystal Beach	350303-0027	09-Nov-20		9	73	0	0	73	2.50
	TOTALS					639	1668	383	200	1085	122.515

7.6 YEARS SUPPLY OF UNITS IN DRAFT APPROVED PLANS

Active Plans in Process

Active Plans simply refer to Draft Plan applications currently in the process for Council consideration. Presently, the available supply of residential lots in Active Plans of Subdivision is equal to 3.1 years using the 5-year rolling average of 220.8 units/year of absorption.

Table 4

Q4 2020 ACTIVE PLANS

ACTIVE PLANS OF SUBDIVISION (NOT DRAFT APPROVED)

	Plan Name	Neighbourhood	Reg/Town File No	Submission Date		# of Lots/ Blocks	# of Units	Single-Det. Lots	Semi-Det. Units	Multiple Units	Site Area (ha)
A01	Harbourtown Village	Lakeshore	350308-108	21-Nov-17		83	237	66	0	171	0.67
A02	613 Helena	Kraft	350308-107	18-Sep-18		69	351	46	121	184	8.16
A03	Royal Ridge Ph.2	Ridgeway-Thunder Bay	350308-112	24-Dec-18		8	47	1	6	40	1.35
A04	Brydgeview Townhouse Ocndominium	Garrison	350303-0031	08-Apr-20		6	26			26	0.79
A05	Peace Bridge Village Phase 3 (Condo)	Garrison	350303-0032	17-Jul-20		5	24			24	0.91
	TOTALS					**171**	**685**	**113**	**127**	**445**	**11.88**

THE AMOUNT OF UNITS IN PROCESS WOULD REPRESENT AN ADDITIONAL SUPPLY OF 3.1 YEARS WORTH OF DWELLINGS UNDER CURRENT 5 YEAR ROLLING AVERAGE

Subdivision Maps

The following pages contain a series of maps that illustrate geographically where each of the Registered, Draft Approved and Active Plans are found within the municipality. The mapping provides a full municipal view for context, but also supplies excepts for the various locations (southwest, east and north) that makes it easier to read and interpret.

Town of Fort Erie
Subdivision Plan Map
2020 - 4th QUARTER

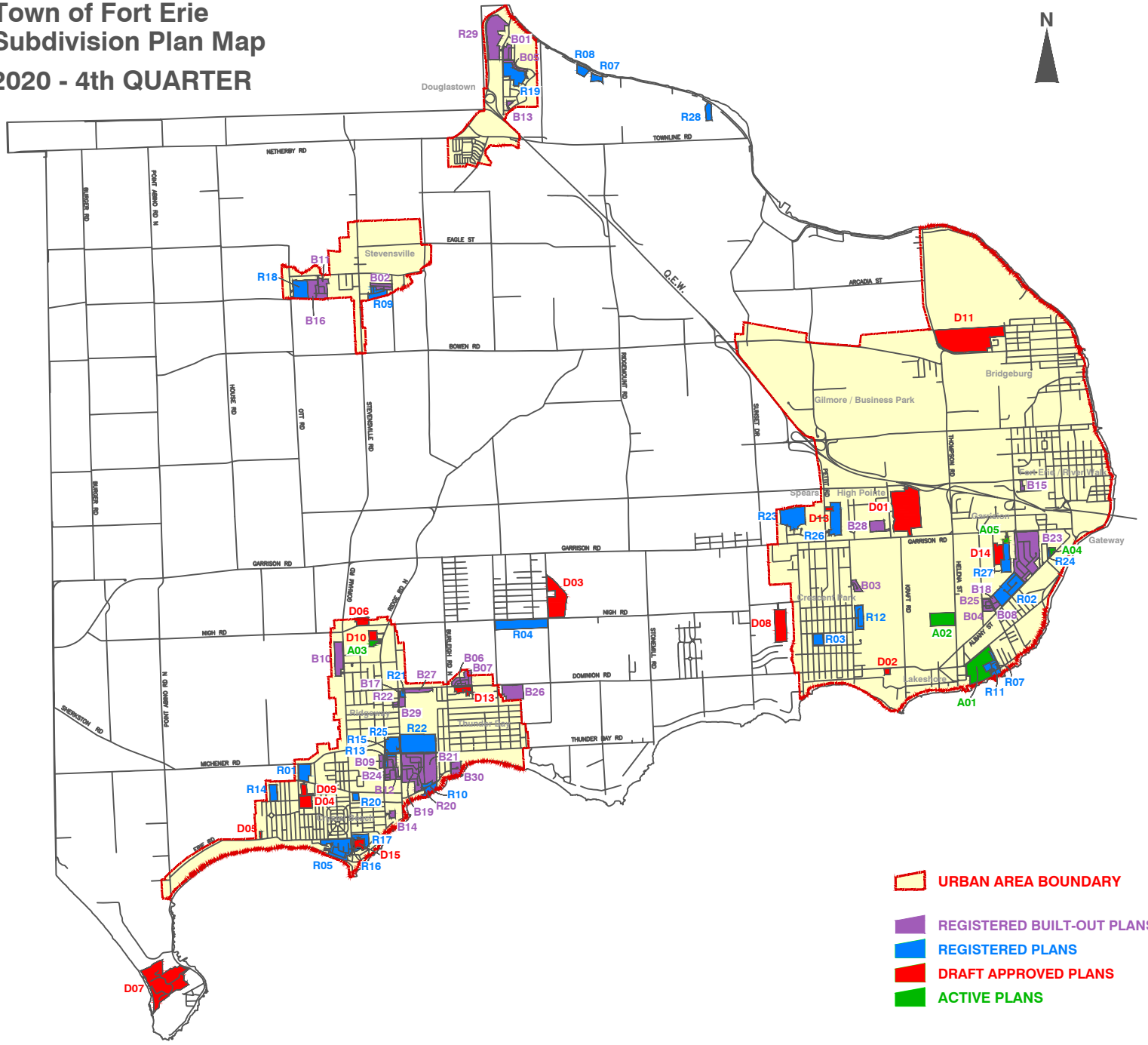

REGISTERED BUILT-OUT PLANS

- B01 Douglas-on-the-Parkway
- B02 Hill Estates North
- B03 Crescent Farm Extension 1
- B04 Victoria Village Phase I
- B05 River Trail Estates 2 Phase I
- B06 North Ridge Meadows Phase I
- B07 North Ridge Meadows Phase II
- B08 Wellington Court Condominiums Phase I
- B09 Henry-Browne
- B10 Beaver Creek Estates
- B11 Village Creek Estates Phase I
- B12 Bay Ridge Crossing Phase II
- B13 River Trail Condominiums
- B14 Shorebreeze Condominiums
- B15 Hagey Avenue Condominiums
- B16 Village Creek Estates Phase II
- B17 Deerwood Lanes Phase I
- B18 Lexington Court Condominiums
- B19 Ridgeway-by-the-Lake Phase I
- B20 Ridge-by-the-Lake Phase II
- B21 Ridgeway-by-the-Lake Phase III
- B22 Willow Trail
- B23 Garrison Village Phase 1
- B24 Prospect Point Plan
- B25 Victoria Village Phase 2
- B26 Dominion Road Estates
- B27 Dominion Woods Phase 1
- B28 Spears Road Estates
- B29 Dominion Woods Phase 2 (Condo)
- R30 Burleigh South

REGISTERED PLANS

- R01 Jetmar Subdivision
- R02 Garrison Village II
- R03 Daytona Park Acres
- R04 Country Squire Estates
- R05 Crystal Beach Tennis & Yacht Club
- R06 Neye Plan I
- R07 Erie Beach IA
- R08 Neye Plan II
- R09 Hill Estates South
- R10 Ridgeway Shores Phase 1
- R11 Erie Beach Phase IB
- R12 Brian Street
- R13 Bay Ridge Crossing Phase I
- R14 Bay Beach Woods
- R15 Bay Ridge Crossing Phase III
- R16 South Coast Village (Phase I)
- R17 South Coast Village (Phase II)
- R18 Village Creek (Phase III)
- R19 River Trail Estates (Phase II)
- R20 Parklane Place
- R21 Deerwood Lane (Phase II Condo)
- R22 The Oaks at 6 Mile Creek
- R23 High Pointe Subdivision
- R24 Brydgeview Phase 1
- R25 Crystal Ridge Landing
- R26 Lu Long Ping (Phase I) (formerly Spears Garden Ph.1)
- R27 Peace Bridge Subdivision (Phase 1)
- R28 River Lea Estates (Condo)
- R29 Black Creek Signature

DRAFT APPROVED PLANS

- D01 Alliston Woods
- D02 Kettle Court
- D03 Hershey Estates
- D04 Schooley Road Condominiums
- D05 Hazelwood Condominiums
- D06 Creekside Estates
- D07 Abino Dunes
- D08 Nigh Road Subdivision
- D09 Elizabeth Road Subdivision (formerly Dunkirk Plan)
- D10 Royal Ridge
- D11 Fort Erie Hills
- D12 Lu Long Ping (Phase II)
- D13 Southridge Meadows
- D14 Peace Bridge Village Phase 2
- D15 South Coast Village Phase 3 Condominium

ACTIVE PLANS (Not Draft Approved)

- A01 Harbourtown Village
- A02 613 Helena
- A03 Royal Ridge Phase 2
- A04 Brydgeview Townhouse Phase 2 (Condo)
- A05 Peace Bridge Village Phase 3 (Condo)

Town of Fort Erie - Subdivision Plan Map 2020 - 4th QUARTER EAST REGION

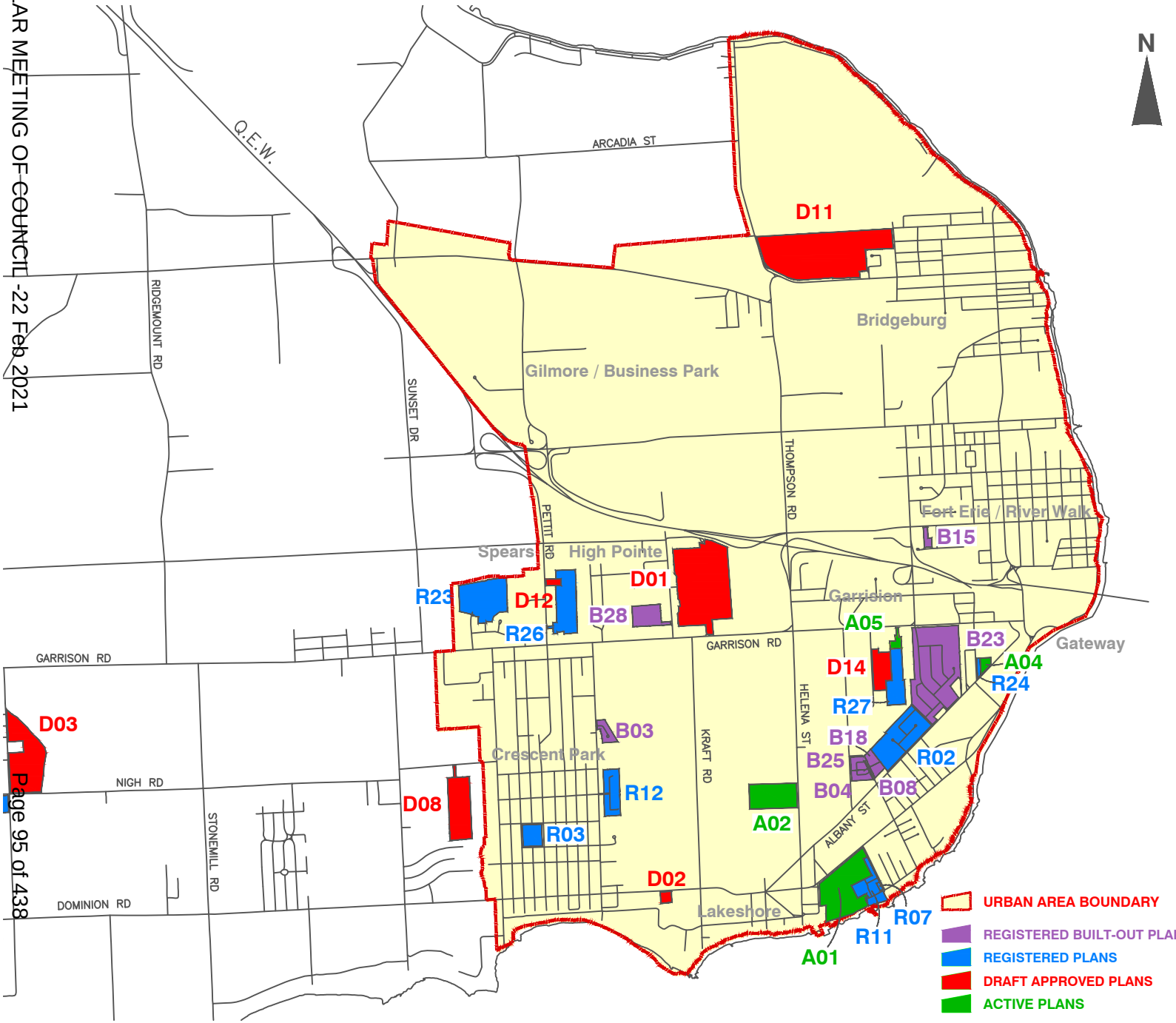

REGISTERED BUILT-OUT PLANS

- B01 Douglas-on-the-Parkway
- B02 Hill Estates North
- B03 Crescent Farm Extension 1
- B04 Victoria Village Phase I
- B05 River Trail Estates 2 Phase I
- B06 North Ridge Meadows Phase I
- B07 North Ridge Meadows Phase II
- B08 Wellington Court Condominiums Phase I
- B09 Henry-Browne
- B10 Beaver Creek Estates
- B11 Village Creek Estates Phase I
- B12 Bay Ridge Crossing Phase II
- B13 River Trail Condominiums
- B14 Shorebreeze Condominiums
- B15 Hagey Avenue Condominiums
- B16 Village Creek Estates Phase II
- B17 Deerwood Lanes Phase I
- B18 Lexington Court Condominiums
- B19 Ridgeway-by-the-Lake Phase I
- B20 Ridge-by-the-Lake Phase II
- B21 Ridgeway-by-the-Lake Phase III
- B22 Willow Trail
- B23 Garrison Village Phase 1
- B24 Prospect Point Plan
- B25 Victoria Village Phase 2
- B26 Dominion Road Estates
- B27 Dominion Woods Phase 1
- B28 Spears Road Estates
- B29 Dominion Woods Phase 2 (Condo)
- R30 Burleigh South

REGISTERED PLANS

- R01 Jetmar Subdivision
- R02 Garrison Village II
- R03 Daytona Park Acres
- R04 Country Squire Estates
- R05 Crystal Beach Tennis & Yacht Club
- R06 Neye Plan I
- R07 Erie Beach IA
- R08 Neye Plan II
- R09 Hill Estates South
- R10 Ridgeway Shores Phase 1
- R11 Erie Beach Phase IB
- R12 Brian Street
- R13 Bay Ridge Crossing Phase I
- R14 Bay Beach Woods
- R15 Bay Ridge Crossing Phase III
- R16 South Coast Village (Phase I)
- R17 South Coast Village (Phase II)
- R18 Village Creek (Phase III)
- R19 River Trail Estates (Phase II)
- R20 Parklane Place
- R21 Deerwood Lane (Phase II Condo)
- R22 The Oaks at 6 Mile Creek
- R23 High Pointe Subdivision
- R24 Brydgeview
- R25 Crystal Ridge Landing
- R26 Lu Long Ping (Phase I) (formerly Spears Gordon Ph.1)
- R27 Peace Bridge Subdivision (Phase 1)
- R28 River Lea Estates (Condo)
- R29 Black Creek Signature

DRAFT APPROVED PLANS

- D01 Alliston Woods
- D02 Kettle Court
- D03 Hershey Estates
- D04 Schooley Road Condominiums
- D05 Hazelwood Condominiums
- D06 Creekside Estates
- D07 Abino Dunes
- D08 Nigh Road Subdivision
- D09 Elizabeth Road Subdivision (formerly Dunfield Plan)
- D10 Royal Ridge
- D11 Fort Erie Hills
- D12 Lu Long Ping (Phase II)
- D13 Southridge Meadows
- D14 Peace Bridge Village Phase 2
- D15 South Coast Village Phase 3 Condominium

ACTIVE PLANS (Not Draft Approved)

- A01 Harbourtown Village
- A02 613 Helena
- A03 Royal Ridge Phase 2
- A04 Brydgeview Townhouse Phase 2 (Condo)
- A05 Peace Bridge Village Phase 3 (Condo)

Town of Fort Erie - Subdivision Plan Map 2020 - 4th QUARTER NORTH REGION

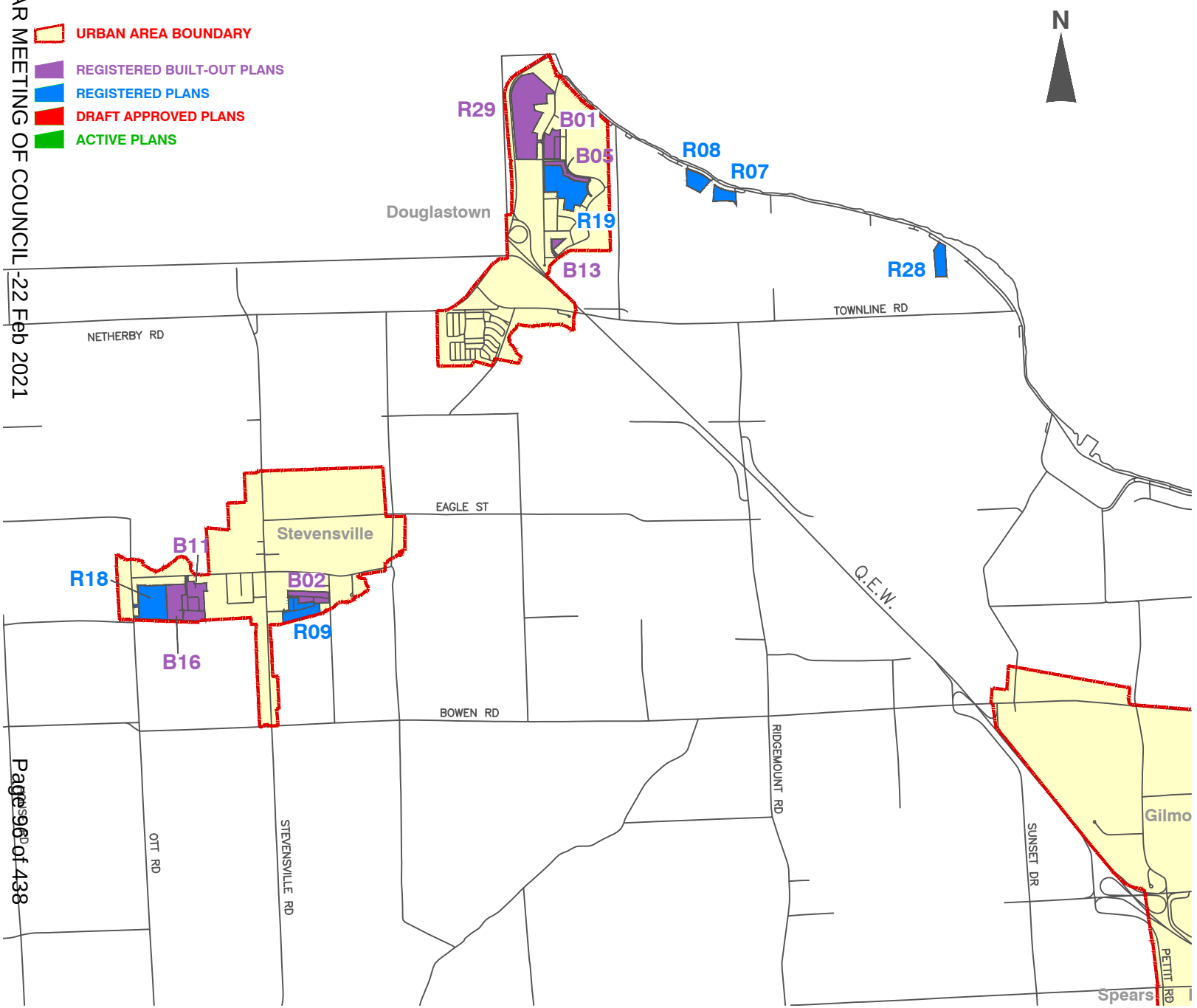

REGISTERED BUILT-OUT PLANS

B01 Douglas-on-the-Parkway
B02 Hill Estates North
B03 Crescent Farm Extension 1
B04 Victoria Village Phase I
B05 River Trail Estates 2 Phase I
B06 North Ridge Meadows Phase I
B07 North Ridge Meadows Phase II
B08 Wellington Court Condominiums Phase I
B09 Henry-Browne
B10 Beaver Creek Estates
B11 Village Creek Estates Phase I
B12 Bay Ridge Crossing Phase II
B13 River Trail Condominiums
B14 Shorebreeze Condominiums
B15 Hagey Avenue Condominiums
B16 Village Creek Estates Phase II
B17 Deerwood Lanes Phase I
B18 Lexington Court Condominiums
B19 Ridgeway-by-the-Lake Phase I
B20 Ridge-by-the-Lake Phase II
B21 Ridgeway-by-the-Lake Phase III
B22 Willow Trail
B23 Garrison Village Phase 1
B24 Prospect Point Plan
B25 Victoria Village Phase 2
B26 Dominion Road Estates
B27 Dominion Woods Phase 1
B28 Spears Road Estates
B29 Dominion Woods Phase 2 (Condo)
R30 Burleigh South

REGISTERED PLANS

R01 Jetmar Subdivision
R02 Garrison Village II
R03 Daytona Park Acres
R04 Country Squire Estates
R05 Crystal Beach Tennis & Yacht Club
R06 Neye Plan I
R07 Erie Beach IA
R08 Neye Plan II
R09 Hill Estates South
R10 Ridgeway Shores Phase 1
R11 Erie Beach Phase IB
R12 Brian Street
R13 Bay Ridge Crossing Phase I
R14 Bay Beach Woods
R15 Bay Ridge Crossing Phase III
R16 South Coast Village (Phase I)
R17 South Coast Village (Phase II)
R18 Village Creek (Phase III)
R19 River Trail Estates (Phase II)
R20 Parklane Place
R21 Deerwood Lane (Phase II Condo)
R22 The Oaks at 6 Mile Creek
R23 High Pointe Subdivision
R24 Brydgeview
R25 Crystal Ridge Landing
R26 Lu Long Ping (Phase I) (formerly Spears Garden Ph.1)
R27 Peace Bridge Subdivision (Phase 1)
R28 River Lea Estates (Condo)
R29 Black Creek Signature

DRAFT APPROVED PLANS

D01 Alliston Woods
D02 Kettle Court
D03 Hershey Estates
D04 Schooley Road Condominiums
D05 Hazelwood Condominiums
D06 Creekside Estates
D07 Abino Dunes
D08 Nigh Road Subdivision
D09 Elizabeth Road Subdivision (formerly Dunfield Plan)
D11 Royal Ridge
D12 Fort Erie Hills
D13 Lu Long Ping (Phase II)
D14 Southridge Meadows
D15 Peace Bridge Village Phase 2
D16 South Coast Village Phase 3 (Condo)

ACTIVE PLANS (Not Draft Approved)

A01 Harbourtown Village
A02 613 Helena
A03 Royal Ridge Phase 2
A04 Brydgeview Townhouse Phase 2 (Condo)
A05 Peace Bridge Village Phase 3 (Condo)

Town of Fort Erie - Subdivision Plan Map 2020 - 4th QUARTER SOUTHWEST REGION

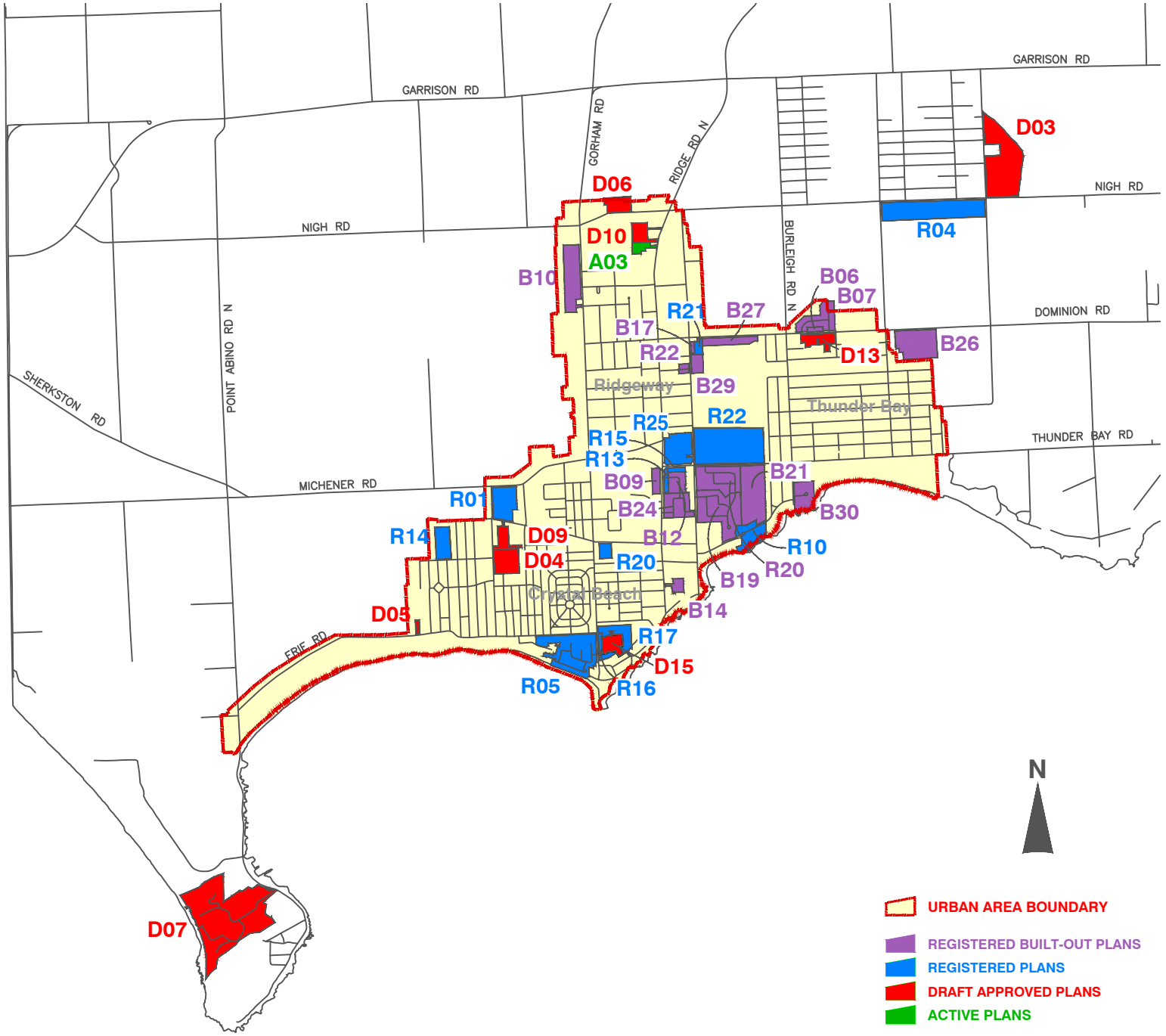

REGISTERED BUILT-OUT PLANS

B01 Douglas-on-the-Parkway
B02 Hill Estates North
B03 Crescent Farm Extension 1
B04 Victoria Village Phase I
B05 River Trail Estates 2 Phase I
B06 North Ridge Meadows Phase I
B07 North Ridge Meadows Phase II
B08 Wellington Court Condominiums Phase I
B09 Henry-Browne
B10 Beaver Creek Estates
B11 Village Creek Estates Phase I
B12 Bay Ridge Crossing Phase II
B13 River Trail Condominiums
B14 Shorebreeze Condominiums
B15 Hagey Avenue Condominiums
B16 Village Creek Estates Phase II
B17 Deerwood Lanes Phase I
B18 Lexington Court Condominiums
B19 Ridgeway-by-the-Lake Phase I
B20 Ridge-by-the-Lake Phase II
B21 Ridgeway-by-the-Lake Phase III
B22 Willow Trail
B23 Garrison Village Phase 1
B24 Prospect Point Plan
B25 Victoria Village Phase 2
B26 Dominion Road Estates
B27 Dominion Woods Phase 1
B28 Spears Road Estates
B29 Dominion Woods Phase 2 (Condo)
R30 Burleigh South

REGISTERED PLANS

R01 Jetmar Subdivision
R02 Garrison Village II
R03 Daytona Park Acres
R04 Country Squire Estates
R05 Crystal Beach Tennis & Yacht Club
R06 Neye Plan I
R07 Erie Beach IA
R08 Neye Plan II
R09 Hill Estates South
R10 Ridgeway Shores Phase 1
R11 Erie Beach Phase IB
R12 Brian Street
R13 Bay Ridge Crossing Phase I
R14 Bay Beach Woods
R15 Bay Ridge Crossing Phase III
R16 South Coast Village (Phase I)
R17 South Coast Village (Phase II)
R18 Village Creek (Phase III)
R19 River Trail Estates (Phase II)
R20 Parklane Place
R21 Deerwood Lane (Phase II Condo)
R22 The Oaks at 6 Mile Creek
R23 High Pointe Subdivision
R24 Brydgeview
R25 Crystal Ridge Landing
R26 Lu Long Ping (Phase I) (formerly Spears Garden Plaza)
R27 Peace Bridge Subdivision (Phase 1)
R28 River Lea Estates (Condo)
R29 Black Creek Signature

DRAFT APPROVED PLANS

D01 Alliston Woods
D02 Kettle Court
D03 Hershey Estates
D04 Schooley Road Condominiums
D05 Hazelwood Condominiums
D06 Creekside Estates
D07 Abino Dunes
D08 Nigh Road Subdivision
D09 Elizabeth Road Subdivision (formerly Dunfield Plan)
D10 Royal Ridge
D11 Fort Erie Hills
D12 Lu Long Ping (Phase II)
D13 Southridge Meadows
D14 Peace Bridge Village Phase 2
D15 South Coast Village Phase 3 Condominium

ACTIVE PLANS (Not Draft Approved)

A01 Harbourtown Village
A02 613 Helena
A03 Royal Ridge Phase 2
A04 Brydgeview Townhouse Phase 2 (Condo)
A05 Peace Bridge Village Phase 3 (Condo)

INDUSTRIAL, COMMERCIAL & INSTITUTIONAL PERMIT ACTIVITY – 2020 Q4

This section provides a brief summary for the fourth quarter and year-end of 2020. This report is provided strictly for information purposes and is not intended to convey analysis. Interpretations drawn from these figures are those of the reader. Staff may add some comments, but in doing so, are intending only to draw attention to certain figures, trends or variations that may be of interest to Council or stakeholders reviewing this report.

Industrial Q4

The Q4 2020 saw three permits issued for New Industrial with a value of $90,000. One additional permit was issued for Addition/Renovation/Alterations with a permit value of $18,000. The total value of Industrial permits in the Q4 2020 was $108,200.

The year-end shows that 9 industrial permits were issued with a total value of $1,233,200.

Commercial Q4

Commercial activity in the Q4 2020 came in the way of two permits under the category of renovations/additions/alterations with a permit value of $224,000 and two permits for New Commercial with a permit value of $800.000 for a total of value of $1,024,000.

The year-end of 2020 shows that 27 Commercial permits were issued with a total value of $5,972,700.

Institutional Q4

There were no permits Institutional building permits issued in the Q4 2020.

The year-end of 2020 shows that 10 Institutional permits were issued with a total value of $6,510,000.

SUMMARY PERMIT VOLUMES & ESTIMATED VALUE – Q4

Table 5 provides the sum totals of each permit category covering the period October 1, 2020 to December 31, 2020.The table breaks down the entire quarter's permits into various categories to assist in quick dissemination of volumes and values. The report also includes the two prior years Q4 activity for direct comparison of the recent history.

Also included with Table 5 are the Year-End permit volumes and estimated values for 2020 and the two prior years as well.

TABLE 5

2020-Q4 Permit Values

Q4 PERMIT VOLUMES AND ESTIMATED VALUES

CLASSIFICATION	2020		2019		2018	
	NO. OF PERMITS Q4 ONLY	ESTIMATED VALUE $	NO. OF PERMITS Q4 ONLY	ESTIMATED VALUE $	NO. OF PERMITS Q4 ONLY	ESTIMATED VALUE $
Total Value of all New Dwellings	**65**	**$27,266,800**	*73*	*$27,217,200*	*36*	*$13,047,000*
New Single Detached Dwellings	**47**	**$20,854,300**	**61**	**$23,352,200**	**36**	**$13,047,000**
New Semi-Detached Dwellings	**0**	**$0**	**0**	**$0**	**0**	**$0**
New Multi-Unit Dwellings/Apartments/Towns	**18**	**$6,412,500**	**12**	**$3,865,000**	**0**	**$0**
Res. Add. Alt, & Repairs	**46**	**$4,057,400**	**44**	**$1,781,500**	**28**	**$830,900**
Garages & Carports	**6**	**$250,000**	**9**	**$421,000**	**7**	**$172,000**
Accessory Buildings	**7**	**$127,500**	**7**	**$81,500**	**3**	**$16,700**
Swimming Pools	**2**	**$55,000**	**0**	**$0**	**1**	**$30,000**
Farm Buildings	**0**	**$0**	**2**	**$580,900**	**3**	**$220,000**
Model Homes	**0**	**$0**	**0**	**$0**	**0**	**$0**
Commercial Business						
New	**2**	**$800,000**	**0**	**$0**	**0**	**$0**
Additions, Alterations, Etc.	**4**	**$224,000**	**4**	**$280,500**	**9**	**$346,000**
Industrial						
New	**3**	**$90,000**	**1**	**$1,500,000**	**1**	**$1,100,000**
Additions, Alterations, Etc.	**1**	**$18,200**	**1**	**$5,000**	**0**	**$0**
Institutional & Gov't						
New	**0**	**$0**	**1**	**$2,480,000**	**1**	**$85,000**
Additions, Alterations, Etc.	**0**	**$0**	**3**	**$560,000**	**2**	**$17,000**
Demolitions	**14**	**$121,500**	**8**	**$47,000**	**5**	**$67,500**
Plumbing	**3**	**$2,622,000**	**5**	**$258,500**	**4**	**$18,100**
Other (sign, tent, tank, etc;)	**4**	**$13,200**	**15**	**$135,000**	**8**	**$577,200**
TOTALS	**157**	**$35,645,600**	**173**	**$35,348,100**	**108**	**$16,527,400**

2020-Year End Permit Values

YEAR-END PERMIT VOLUMES AND ESTIMATED VALUES

CLASSIFICATION	2020		2019		2018	
	NO. OF PERMITS YEAR END	ESTIMATED VALUE $	NO. OF PERMITS YEAR END	ESTIMATED VALUE $	NO. OF PERMITS YEAR END	ESTIMATED VALUE $
Total Value of all New Dwellings	**243**	**$99,260,000**	*230*	*$88,304,600*	*169*	*$49,053,300*
New Single Detached Dwellings	**184**	**$74,065,500**	**180**	**$75,255,600**	**96**	**$36,735,000**
New Semi-Detached Dwellings	**2**	**$520,000**	**2**	**$700,000**	**0**	**$0**
New Multi-Unit Dwellings/Apartments/Towns	**57**	**$24,674,500**	**48**	**$12,349,000**	**73**	**$12,318,300**
Res. Add. Alt, & Repairs	**157**	**$8,485,900**	**159**	**$8,213,200**	**142**	**$3,770,700**
Garages & Carports	**27**	**$1,346,000**	**44**	**$1,562,100**	**39**	**$1,373,700**
Accessory Buildings	**14**	**$195,100**	**22**	**$218,700**	**22**	**$262,400**
Swimming Pools	**33**	**$793,100**	**29**	**$589,300**	**36**	**$810,300**
Farm Buildings	**1**	**$100,000**	**6**	**$814,900**	**5**	**$236,000**
Model Homes	**0**	**$0**	**0**	**$0**	**0**	**$0**
Commercial Business						
New	**6**	**$2,950,000**	**2**	**$160,000**	**7**	**$1,565,000**
Additions, Alterations, Etc.	**21**	**$3,022,700**	**21**	**$1,375,900**	**37**	**$5,669,300**
Industrial						
New	**3**	**$90,000**	**2**	**$1,600,000**	**3**	**$21,600,000**
Additions, Alterations, Etc.	**6**	**$1,143,200**	**3**	**$185,000**	**3**	**$5,535,000**
Institutional & Gov't						
New	**4**	**$6,200,000**	**2**	**$2,540,000**	**9**	**$1,388,100**
Additions, Alterations, Etc.	**6**	**$310,000**	**9**	**$792,500**	**10**	**$1,109,000**
Demolitions	**32**	**$256,700**	**50**	**$622,500**	**38**	**$689,800**
Plumbing	**16**	**$4,405,500**	**18**	**$462,900**	**26**	**$1,649,800**
Other (sign, tent, tank, etc;)	**22**	**$159,175**	**47**	**$258,600**	**32**	**$706,000**
TOTALS	**591**	**$128,717,375**	**644**	**$107,700,200**	**578**	**$95,418,400**

DEVELOPMENT CHARGE (DC) REPORT

Planning and Development Services monitors the Industrial and Commercial construction sectors with an interest in keeping track of the DC's collected on projects that are not exempt or credited under the By-law permissions. Development Charges are often a topic for discussion in relation to encouraging new development across all sectors, but for the purposes of this report, the Town focus is on Industrial and Commercial.

The fourth quarter of 2020 saw four Commercial permits that resulted in the collection of Town development charges. One permit in October resulted in $28,747.91 in Town DC's and three permits in December resulted in a total of $34,114.61 in Town DC's. This shows for a total of $42,862.52 in Town DC's. The DC's were collected for an indoor recreation building, A&W Restaurant, Starbucks and Taco Bell.

The Niagara Catholic District School Board Education Development Charge does not apply to Industrial or Commercial development and therefore is not being monitored under these sectors.

BY-LAW ENFORCEMENT - Q4 2020

This section provides statistics related to the volume of calls for service (complaints) and actions the Town's By-law Enforcement Officers are experiencing for the information of Council and the general public. Table 6 provides a look at the calls for service for the previous 7 years and year-to-date (YTD). Table 7 provides a more detailed breakdown of the types and volumes of complaints filed, which vary from quarter to quarter. The year-end data in attached as **Table 8** for comparison. Table 9 indicates the percentage of new calls for service during the Q4 period.

It is worth noting that in a span of only 8 years, the number of By-law calls for service have effectively doubled in volume and are now topping 1000+ per year.

Table 6

TOTAL CALLS FOR SERVICE 2013-2020	
2013 (YE)	522
2014 (YE)	580
2015 (YE)	675
2015 (YE)	837
2017 (YE)	937
2018 (YE)	961
2019 (YE)	1164
2020 (YE)	1725
Total Complaints	**7401**

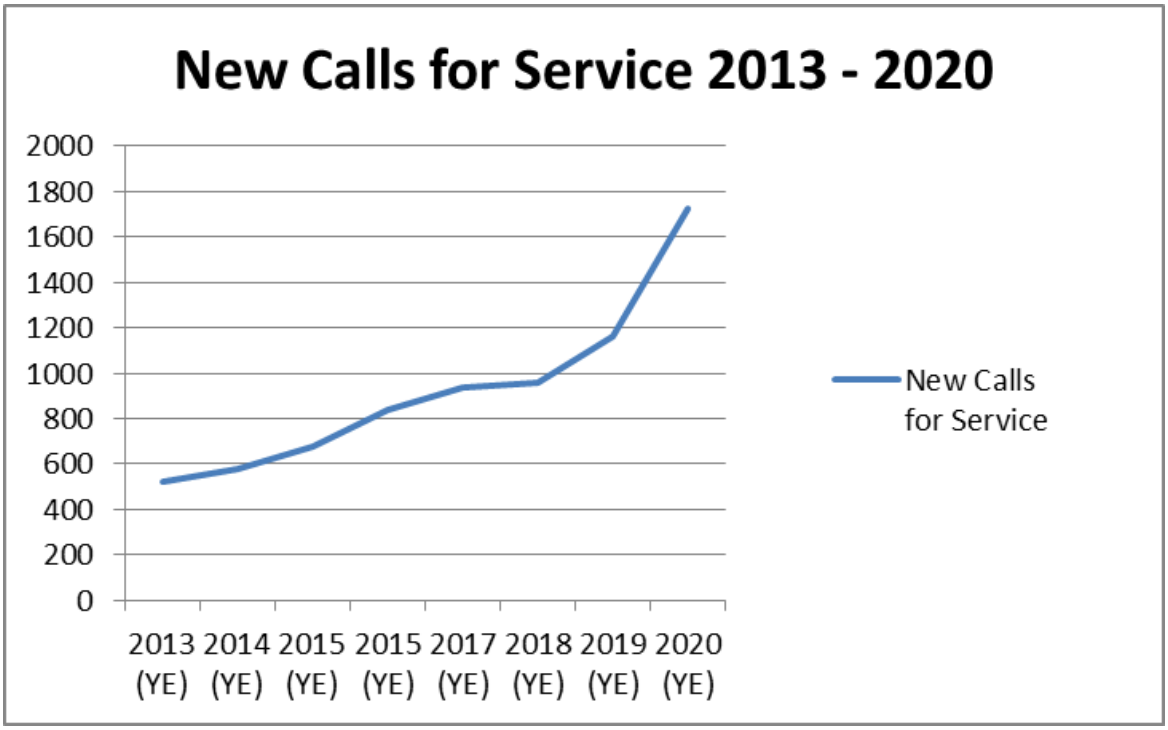

Table 7

By –Law Enforcement Quarterly Statistics October 1 to December 31, 2020 Q4 - 2020				
BY-LAW	Calls Carried Over from Q3 - 2020	New Calls for Service	Resolved Calls	Pending Calls
WASTE AND DEBRIS	70	48	68	50
LONG GRASS & WEEDS	17	1	16	2
ZONING	21	25	21	25
NOISE	1	17	18	0
PROPERTY STANDARDS	92	69	98	63
MISCELLAENOUS	49	88	93	44
COVID-19 RELATED	0	157	157	0
PARKING	0	46	41	5
SHORT TERM RENTALS	5	0	5	0
TOTAL	255	451	517	189

Table 8

By –Law Enforcement Yearly Statistics January 1 to December 31, 2020 YEAR-END 2020				
BY-LAW	Calls Carried over from 2019	YTD New Calls for Service	YTD Resolved Calls	Pending Calls
WASTE AND DEBRIS	17	298	265	50
LONG GRASS & WEEDS	0	216	214	2
ZONING	10	85	70	25
NOISE	7	80	87	0
PROPERTY STANDARDS	64	234	235	63
MISCELLAENOUS	21	318	295	44
COVID-19 RELATED	NA	350	350	0
PARKING	NA	121	116	5
SHORT TERM RENTALS	NA	23	23	0
TOTAL	119	1581	1516	189

Graph 9

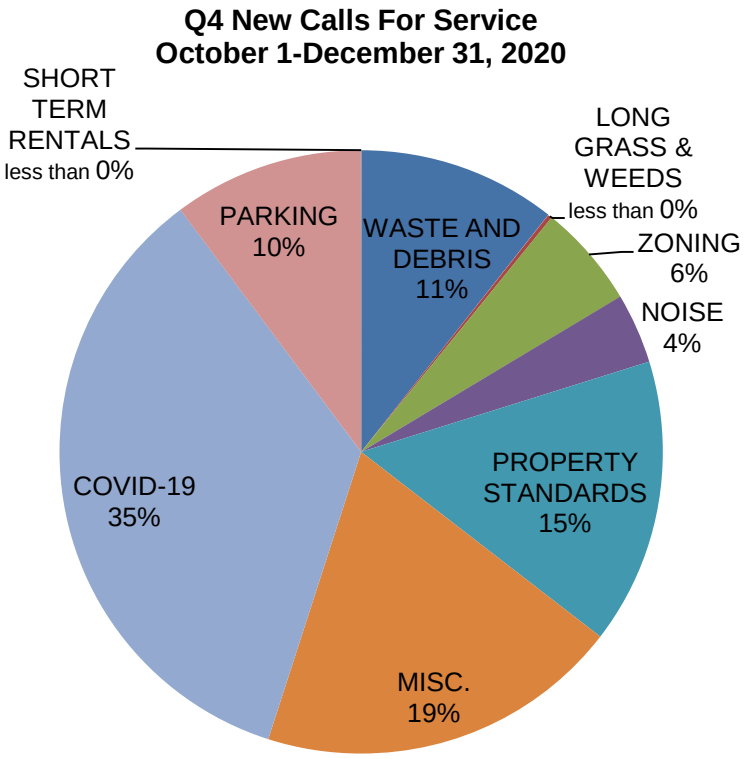
Q4 New Calls For Service
October 1-December 31, 2020
SHORT TERM RENTALS less than 0%
LONG GRASS & WEEDS less than 0%
ZONING 6%
NOISE 4%
PROPERTY STANDARDS 15%
MISC. 19%
COVID-19 35%
PARKING 10%
WASTE AND DEBRIS 11%

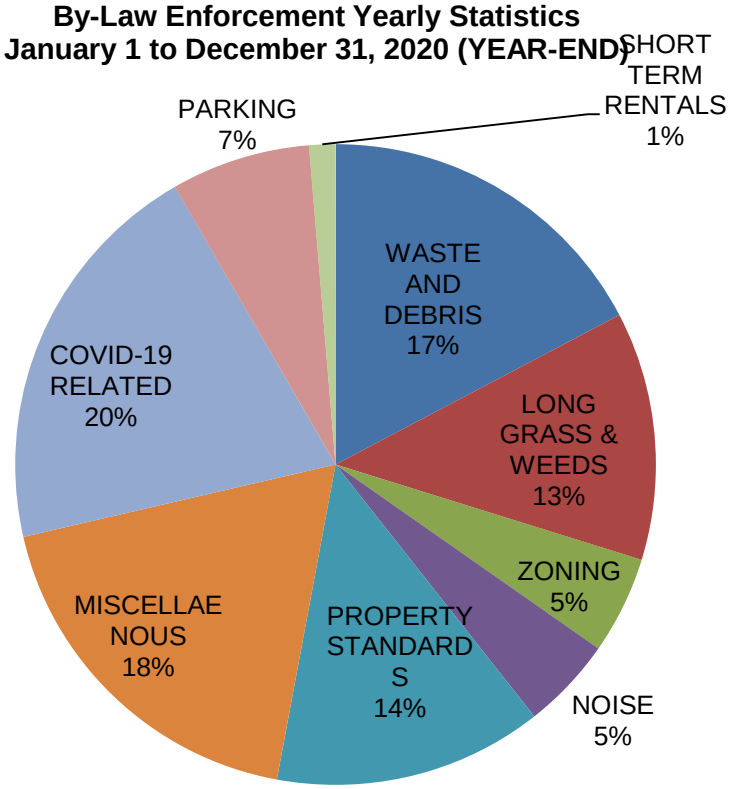
By-Law Enforcement Yearly Statistics
January 1 to December 31, 2020 (YEAR-END)
SHORT TERM RENTALS 1%
PARKING 7%
WASTE AND DEBRIS 17%
LONG GRASS & WEEDS 13%
ZONING 5%
NOISE 5%
PROPERTY STANDARDS 14%
MISCELLAE NOUS 18%
COVID-19 RELATED 20%

Parking Violations

In the Q4 2020, 67 penalty notices were issued compared to 107 in the Q4 2019.

The total number of tickets issued in 2020 was 1115 compared to 607 in 2019.

Graph 10

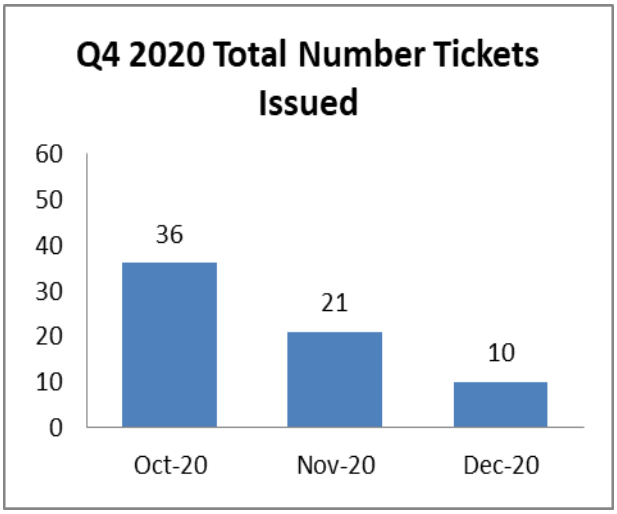

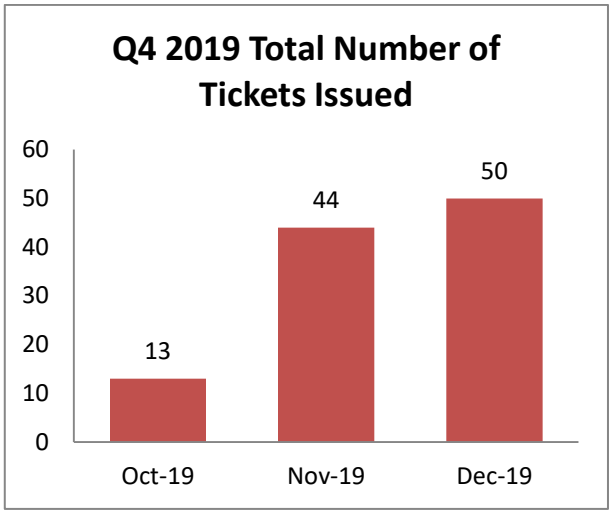

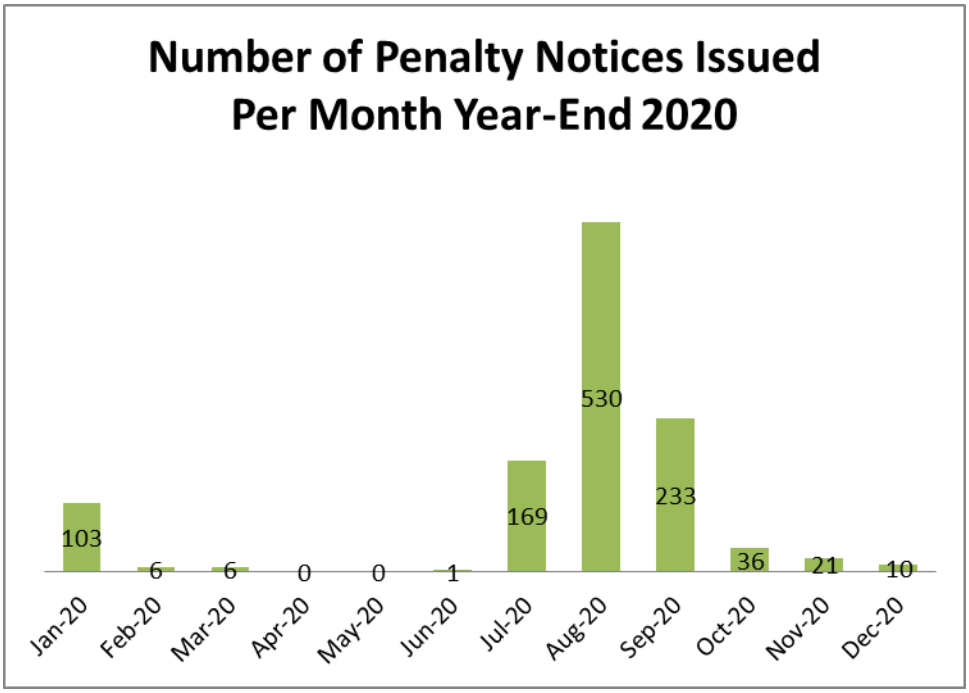

Planning and Development Services

Prepared for	Regular Council	**Report No.**	PDS-14-2021
Agenda Date	February 22, 2021	**File No.**	130103

Subject

URBAN AREA BOUNDARY EXPANSION STUDY – ADDENDUM #1

Recommendations

THAT Council endorses the Urban Boundary Expansion Study – Addendum #1, for the purpose of the Region of Niagara's Municipal Comprehensive Review process, attached as **Appendix "1"** to Report No. PDS-14-2021, and further

THAT Council directs Staff to forward a copy of the Study to the Region of Niagara to further inform the Region of Niagara's Municipal Comprehensive Review and Official Plan Update,

Relation to Council's 2018-2022 Corporate Strategic Plan

Priority: Promoting Business, Economic Growth and Employment Opportunities
Goal 4.2: Proceed with the Industrial Land Strategy
Initiative: Facilitate the availability of shovel ready industrial land

List of Stakeholders

The Corporation of the Town of Fort Erie
Economic Development Stakeholders
Industrial Businesses and Manufacturers
Residents of the Town Of Fort Erie

Prepared by:	Submitted by:	Approved by:
Original Signed	*Original Signed*	*Original Signed*
Lindsay Richardson, MCIP, RPP Senior Community Planner	Kira Dolch, MCIP, RPP, CNU-A Director, Planning and Development Services	Tom Kuchyt, CET Chief Administrative Officer

Purpose of Report

The purpose of this report is seek Council's endorsement, of the Town of Fort Erie Urban Boundary Expansion Study – Addendum #1 in order to provide the Region of Niagara with additional candidate Urban Area Boundary (UAB) expansion sites for consideration through their Municipal Comprehensive Review (MCR) and Official Plan update.

A final report will be forthcoming in March 2021 that will review phasing of the candidate lands identified in the Interim Study and identify UAB expansion opportunities that are under 40 ha and as per the new Growth Plan requirements. These sites will require Regional approval, but do not require consideration under the MCR process.

Analysis

Background

On January 11, 2021, Council approved the recommendations of PDS-03-2021 Urban Area Boundary Expansion Study – Interim Report. The purpose of this report was to identify candidate urban area boundary expansion sites (both employment and residential lands) for consideration through the Region of Niagara's Municipal Comprehensive Review (MCR) and Official Plan update.

Study work began in August of 2020 and included preliminary data and information gathering. Once this review was completed, a draft background report and confirmation of employment and industrial land needs was provided to Staff. In October 2020, Staff and the consulting team met with the Region of Niagara to review the initial study findings and preliminary sites. Further consultation with the Region occurred in November and a public open house was held virtually on November 25, 2020. Generally, comments focused on land use, environmental impacts, site selection and what inclusion in the UAB would mean to property owners as well as next steps.

Since finalizing the Interim Report, five additional requests for consideration were submitted to the staff (Senior Community Planner). Due to the timing of these submissions, Staff and the Project Team did not have the opportunity to fully review these sites prior to the Interim Report being endorsed by Council. The purpose of Addendum #1 is to update the Interim Report with analysis for these additional sites.

It should be noted that the Region has indicated that any further requests for urban boundary expansions be forwarded directly to their Staff for consideration. Staff will direct the requests identified in Addendum #1 to the Region and provide the applicants with the appropriate contact information.

Analysis

The five additional requests for consideration required an analysis of 14 additional sites that were assessed based on the criteria set out in the original study:

1. Agricultural Analysis
2. Environmental Constraints
3. Size
4. Existing Site Condition(s)
5. Surrounding Context
6. Access
7. Servicing

Following this analysis, recommendations were provided based on the suitability of lands to provide additional employment and/or residential lands to the Town. The detailed analysis can be found in the Urban Boundary Expansion Study Interim Report – Addendum 1 which is attached as **Appendix "1"** to this report.

The additional lands were then prioritized within the context of the lands that were identified in the original study. Generally, even with the additional sites, the priority lands that were identified in the original study for both residential and employment have remained the same. The CMS lands and lands adjacent to the QEW have been identified as the top priority for employment expansion and lands around Ridgeway Crystal Beach have been identified as the top priority for residential expansion.

Financial/Staffing Implications and AODA Considerations

There are no additional AODA, staffing or financial implications. The Urban Area Boundary Expansion Study - Addendum #1 will be forwarded to the Region of Niagara and any follow-up with individual land owners, including potential study requirements or additional information required will be done via the Region.

Policies Affecting Proposal

By-law No. 124-2019 adopted Council's 2018-2022 Corporate Strategic Plan, which includes the following:

Priority: Promoting Business, Economic Growth and Employment Opportunities
Goal 4.2: Proceed with the Industrial Land Strategy
Initiative: Facilitate the availability of shovel ready industrial land

Comments from Relevant Departments/Community and Corporate Partners

None

Communication Requirements

As noted in this report, the Region has indicated that any further requests for urban boundary expansions be forwarded directly to their Staff for consideration. Staff will direct the applicants who made requests identified in Addendum #1 to the Region for any follow up. Any additional requests that come in will also be forwarded directly to the Region for consideration.

Alternatives

Although not recommended, Council could choose to add or remove properties from the urban boundary expansion study.

Attachments

Appendix "1" – Urban Boundary Expansion Study – Addendum #1

TOWN OF FORT ERIE

URBAN BOUNDARY EXPANSION STUDY

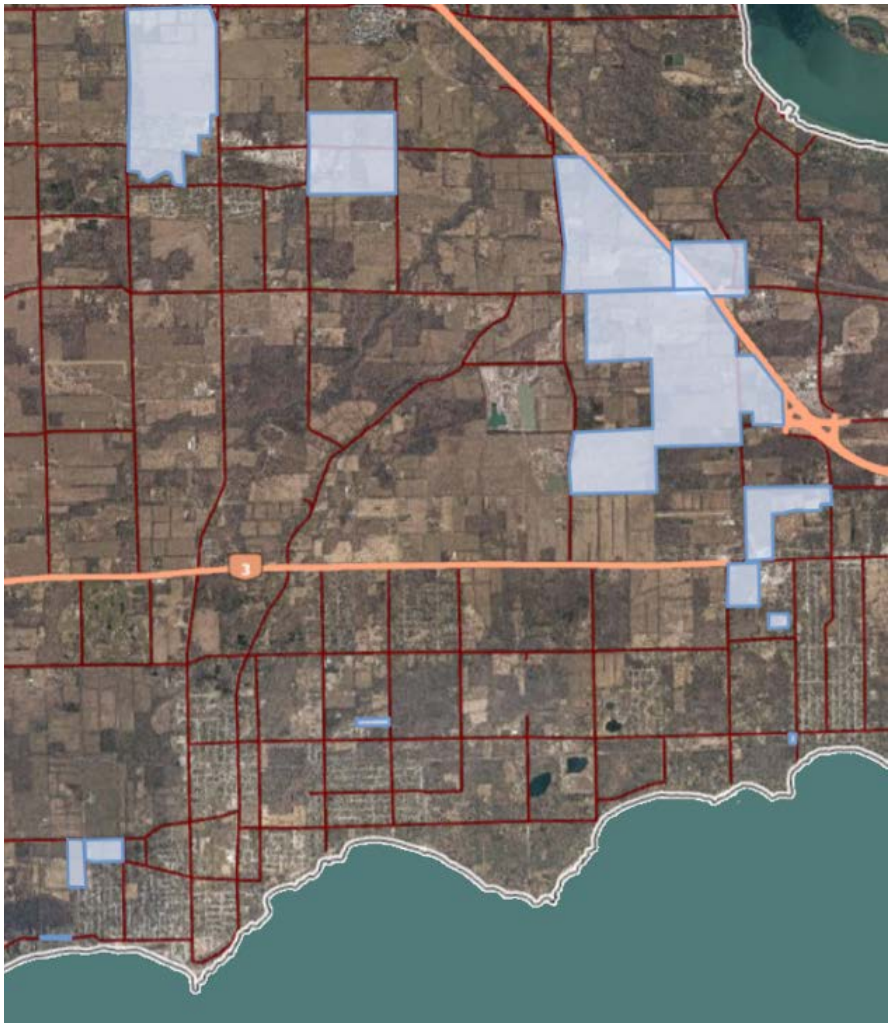

DRAFT – FEBRUARY 2021

INTERIM REPORT – ADDENDUM 1

TABLE OF CONTENTS

1 INTRODUCTION 1

1.1 Study Purpose 2

2 REPORT RECOMMENDATIONS 4

3 ADDITIONAL LANDS 10

3.1 0 Nigh Road 11

3.2 171 Gorham Road 14

3.3 2900 College Road 17

3.4 Schooley Road 26

3.5 Sunset Road 29

3.6 Summary Table 32

4 FINAL RECOMMENDATIONS 34

TABLES

TABLE 1: PRELIMINARY RECOMMENDATIONS SUMMARY TABLE - EMPLOYMENT LANDS 6
TABLE 2: PRELIMINARY RECOMMENDATIONS SUMMARY TABLE - RESIDENTIAL LANDS 8
TABLE 3: SUMMARY TABLE – ADDITIONAL LANDS 33
TABLE 4: PRIORITIZED SUBJECT LANDS - RESIDENTIAL 34
TABLE 5: PRIORITIZED SUBJECT LANDS - EMPLOYMENT 35

FIGURES

FIGURE 1: LOCATION OF REPORT CANDIDATE LANDS 4
FIGURE 2: 0 NIGH ROAD SUBJECT LANDS 11
FIGURE 3: 171 GORHAM ROAD SUBJECT LANDS 14
FIGURE 4: 2900 COLLEGE ROAD SUBJECT LANDS (BOUSFIELDS INC.) 17
FIGURE 5: SCHOOLEY ROAD SUBJECT LANDS 26
FIGURE 6: SUNSET ROAD SUBJECT LANDS 29

1 INTRODUCTION

WSP, with urbanMetrics and DBH Soil Services Inc. prepared an Urban Area Boundary Expansion Study Interim Report (the “Report”) as part of the Town of Fort Erie Urban Boundary Expansion Study (the “Study”). This Report was presented to and received by Town Council on January 11, 2021. This Report identified, assessed and prioritized potential lands to be considered for future employment and residential uses in order to accommodate anticipated projected growth within the Town of Fort Erie.

Following the completion of the Report, fourteen additional lands were identified by local landowners and submitted to the Town for their consideration as part of this Study. WSP has prepared an Addendum to assess these additional lands to be considered for potential future employment and/or residential use.

This Addendum will provide an overview of the Study’s purpose and methodology, summarize the candidate land recommendations, and assess the additional lands provided to the Town. It will conclude by providing updated recommendations for the Town’s consideration.

1.1 STUDY PURPOSE

The Town has undertaken several strategic studies in recent years to determine its employment land needs, including examining existing constraints and potential opportunities to meet its long-term needs. In January 2020, Town Council supported the establishment of an Industrial Land Development Reserve Fund to finance the servicing and purchasing of Industrial Lands as a means to accommodate projected land needs. This Study represents a continuation of these efforts, with the aim to identify, assess, recommend, and rationalize lands that can serve as additional employment lands for the Town of Fort Erie.

Given the recent changes to the A Place to Grow: Growth Plan for the Greater Golden Horseshoe, including Amendment 1, 2020, (the Growth Plan) and Provincial Policy Statement, 2020 (PPS, 2020), municipalities are permitted to propose new, or conversions to, employment lands outside of a Municipal Comprehensive Review (MCR) process, through land swaps and/or urban area boundary (UAB) expansions provided that certain conditions are satisfied. Accordingly, this Study identifies specific lands that are adjacent or are in proximity to the Town's existing UAB that are suitable for expansion. In addition to this, the Region is also undertaking an MCR and is canvassing each of the local municipalities, including the Town of Fort Erie, to identify which lands could be brought into the UAB should the need be identified. As such, this Study will also be used as input to the Region's MCR to determine the locations of any UAB expansions, once the Region has determined overall land need.

The Town of Fort Erie has two options to provide additional employment and/or residential lands to accommodate future growth. These options include:

1. Identifying parcels of land no greater than 40ha in size to be considered for land swaps and/or UAB expansion outside of an MCR process; or
2. Identifying lands to be added into an UAB should the Region determine the need for additional lands.

As part of this Study, a Memo was prepared that confirmed employment land needs by reviewing relevant Provincial, Regional and local policies, studies and data. It was determined that an increase of between 138 and 186 net hectares of additional employment lands is required to accommodate future growth within the Town of Fort Erie. In anticipation of future residential growth, the Town has identified lands located adjacent to existing UABs to be assessed as potential residential uses. This analysis has been added as a provisional task of the Study and is presented in the Report.

Following the Confirmation of Employment Land Needs, thirteen candidate areas were identified to be considered for potential future employment and residential uses. Due to varying characteristics such as size and location, and to make the site analysis and evaluation clearer and more comprehensive, these thirteen areas have been grouped into seven candidate areas. Lands to be considered for employment use include the Canadian Motor Speedway (CMS) lands, lands along Eagle Street, lands along the Queen Elizabeth Way (QEW), and lands along the QEW and Bowen Road. Lands to be considered for potential residential uses include areas within Spears High Pointe-Crescent Park and Ridgeway-Crystal Beach as well as lands in Stevensville. The lands

identified within this Study are conceptual and provide a general land area for consideration as part of potential future growth in the Town. According to the findings of the assessment and feedback from the Region, Town and/or stakeholders, these lands may be refined at a later date.

Lands considered within this Study were assessed to determine their suitability for accommodating future growth, based on several criteria, including:

1. **Agricultural Analysis:** Some of the candidate lands are currently designated as Agricultural. As such, an agricultural analysis has been completed to understand the quality of the lands. Where necessary, further study required has been identified.
2. **Environmental Constraints:** Lands that may accommodate future growth need to consider environmental constraints (e.g., ANSI) that would require additional study prior to development.
3. **Size:** Lands will need to be an appropriate size (area) to accommodate development, while largely satisfying the requirements of the Town's land use planning framework, principally including the Official Plan, Secondary Plans and Zoning By-law.
4. **Existing Site Conditions:** Existing site conditions refer to applicable Regional and Town land use planning policies, designations, and zoning. This criterion also refers to existing land uses.
5. **Surrounding Context:** Land use compatibility is an important consideration where new employment or residential uses are proposed. In this regard, lands will be evaluated based on the surrounding context and where it is determined that there is appropriate land use compatibility based on Provincial, Regional and Town requirements.
6. **Access:** The feasibility of employment lands require sufficient access to major transportation corridors, such as Provincial highways or heavy rail, for example. Consideration may also be given to mitigating traffic impacts to more sensitive land uses, where feasible.
7. **Servicing:** Any development will require access to full municipal servicing. Where full municipal servicing is not currently available, the Town may need to undertake additional plans and/or studies to confirm available servicing capacity or the phasing of development over the planning horizon.

Following this analysis, preliminary recommendations were provided based on the suitability of lands to provide additional employment and/or residential lands to the Town.

2 REPORT RECOMMENDATIONS

Thirteen candidate areas were identified and assessed by the project team to determine their suitability for potential future residential and/or employment land uses within the Town. These lands varied in size and location, servicing opportunities and development constraints. The detailed assessment of each candidate area is available in the Report. Figure 1 below shows the location of the thirteen lands assessed in the Report.

Figure 1: Location of Report candidate lands

Informed by the assessment of candidate lands, the following summary tables (Tables 1 and 2) were prepared to provide preliminary recommendations by ranking the suitability of lands for employment or residential use.

It is recommended that the Town consider prioritizing the CMS lands and lands along the QEW and Bowen Road for employment use. These candidate lands offer strategic opportunities to develop Regionally significant employment lands due to their locations. Further study and evaluation of municipal servicing availability is required to develop portions of these lands; therefore, it is recommended that the development of these subject lands be phased.

It is recommended that the Town consider prioritizing the Ridgeway-Crystal Beach and Spears High Pointe-Crescent Park lands for residential use. The lands in the Ridgeway-Crystal Beach area have reasonable access to servicing and limited environmental constraints. Two areas of the Spears High Pointe-Crescent Park lands (approximately 20.5ha in total) present limited environmental constraints and have access to servicing.

The Stevensville lands should be considered for deferred residential. However, constraints such as the potential future Mid-Peninsula Highway MTO Corridor could impact the feasibility of development for these lands. Due to its size, it is recommended that a Secondary Plan be prepared for these subject lands to develop a land use framework informed by further studies such as environmental and agricultural conditions, servicing requirements and traffic analysis, among others.

Table 1: Preliminary Recommendations Summary Table - Employment Lands

	CMS Lands	QEW Lands	Eagle Street	QEW and Bowen Road
Ranking	Priority 1	Priority 4	Priority 3	Priority 2
Size (Gross)	346ha	26ha	98ha	151.4ha
Agricultural Lands	Lands comprise of CLI classes 2, 3, 4 and 6	Lands comprise of CLI classes 1, 2, 3 and 4	Lands comprise of CLI classes 3 and 5	Lands comprise of agricultural use
Environmental Constraints	Lands contain Provincially and Locally significant features, ECA and EPA, among others. Potentially developable lands: Approx. 311.94ha (91%)	Lands contain Provincially and Locally significant features, ECA and EPA, among others. Potentially developable lands: Approx. 15.4ha (59%)	Lands contain ECA and EPA, among others. Potentially developable lands: Approx. 88.54ha (93%)	Lands contain NPCA regulated wetlands, ECA and EPA, among others.
Access	QEW, Arterials	QEW, Arterials	Arterials, 2km from QEW	QEW, Arterials
Servicing	Not Serviced*	Water, No Sanitary	Water and Sanitary	Water, No Sanitary
Required Studies and Considerations	EIS, Mineral Aggregate Resource Study, AIA, MDS Assessment, Mid-Peninsula MTO Corridor	EIS, AIA, MDS Assessment	EIS, AIA, MDS Assessment, CP Rail buffer, NPCA approval	EIS, AIA, MDS Assessment, CP Rail buffer, NPCA approval
Development Approach	Phase development from east to west due to QEW access, servicing in the surrounding areas, and Extractive Industrial lands to the west.	These subject lands are considered the lowest priority due to environmental constraints.	Phase development from west to east due to existing serviced Industrial lands within Stevensville. Develop eastern portion following environmental studies. Defer development due to Mid-Peninsula MTO Corridor.	Phase development from north to south due to existing watermain along Eagle Street. Subject to EIS results as the regulated wetland is located along the northern border.

*Initial servicing analysis has been undertaken by the Town.

*CLI denotes Canada Land Inventory

*EIS denotes Environmental Impact Study

*AIA denotes Agricultural Impact Assessment

*MDS denotes Minimum Distance Setback

*NPCA denotes Niagara Peninsula Conservation Authority

*ECA denotes Environmental Conservation Area

*EPA denotes Environmental Protection Area

Table 2: Preliminary Recommendations Summary Table - Residential Lands

	Stevensville	Spears High Pointe-Crescent Park Area 1	Spears High Pointe-Crescent Park Area 2	Spears High Pointe-Crescent Park Area 3	Spears High Pointe-Crescent Park Area 4	Ridgeway-Crystal Beach Area 1	Ridgeway-Crystal Beach Area 2	Ridgeway-Crystal Beach Area 3	Ridgeway-Crystal Beach Area 4
Ranking	Priority 3	Priority 2c	Priority 2b	Priority 2d	Priority 2a	Priority 1a	Priority 1d	Priority 1b	Priority 1c
Size (Gross)	210ha	43.5ha	19.7ha	3.8ha	0.8ha	11.0ha	3.6ha	10.3ha	0.5ha
Agricultural Lands	Lands comprise of CLI classes 2 and 5	Lands comprise of CLI classes 2, 3 and 4	Lands comprise of CLI classes 2 and 3	Lands comprise of CLI classes 2 and 3	Lands comprise of CLI class 3	Lands comprise of CLI classes 1, 2 and 3	Lands comprise of CLI classes 2, 3 and 4	Lands comprise of CLI class 2 Approx. 10.3ha of CLI class 2	Lands comprise of CLI class 2 Approx. 0.5ha of CLI class 2
Environ-mental Constraints	Lands contain Provincially and Locally significant features, ECA and EPA, among others. Potentially developable lands: Approx. 176.26ha (91%)	Lands contain Provincially significant features, ECA and EPA, among others. Potentially developable lands: Approx. 38.71ha (89%)	Lands contain Locally significant features and ECA, among others. Potentially developable lands: Approx. 19.71ha (100%)	Lands contain Locally significant features. Potentially developable lands: Approx. 3.88ha (100%)	Lands contain unevaluated wetlands and ECA, among others. Potentially developable lands: Approx. 0.42ha (49%)	Lands contain unevaluated wetlands. Potentially developable lands: Approx. 2.95ha (99.6%)	Lands contain minimal environmental features. Potentially developable lands: Approx. 11.03ha (100%)	Lands contain Provincially and Locally significant features, ECA and EPA, among others. Potentially developable lands: Approx. 10.3ha (100%)	Lands contain minimal environmental features. Potentially developable lands: Approx. 0.27ha (100%)
Access	Arterials, 2km from QEW	Arterials, 1.5km from QEW	Arterials, 2.5km from QEW	Not accessible	Arterials, 5km from QEW	Arterials	Arterials	Arterials	Arterials

	Stevensville	Spears High Pointe-Crescent Park Area 1	Spears High Pointe-Crescent Park Area 2	Spears High Pointe-Crescent Park Area 3	Spears High Pointe-Crescent Park Area 4	Ridgeway-Crystal Beach Area 1	Ridgeway-Crystal Beach Area 2	Ridgeway-Crystal Beach Area 3	Ridgeway-Crystal Beach Area 4
Servicing	Water and Sanitary	Water and Sanitary	Water and Sanitary	Not Serviced	Water and Sanitary	Water and Sanitary	Water, Potential Sanitary	Water and Sanitary	Water and Sanitary
Required Studies and Consider-ations	EIS, AIA, MDS Assessment, CP Rail buffer, Safari Niagara, Mid-Peninsula MTO Corridor	EIS, AIA, MDS Assessment	EIS, AIA, MDS Assessment	EIS, AIA, MDS Assessment	EIS, AIA, MDS Assessment	EIS, AIA, MDS Assessment	EIS, AIA, MDS Assessment, NPCA approval	EIS, AIA, MDS Assessment	EIS, AIA, MDS Assessment
Develop-ment Approach	Due to various limitations within northern portion (including Mid-Pen MTO Corridor), further analysis is recommended to identify the best approach to phasing this development. It is recommended that a Secondary Plan be completed for these lands to best analyze its potential.	Area 1 could be considered for subsequent development, as there are environmental constraints.	Area 2 should be prioritized, as it is serviced, accessible and does not require environmental studies.	Area 3 should be the last phase of development for these subject lands due to access and servicing limitations.	As there are no environmental constraints and Area 4 is serviced, these subject lands could be prioritized for development.	Area 1 could be prioritized for development, as it is accessible and serviced. Environmental constraints are present.	Area 2 could be considered for subsequent development, as further analysis is required to confirm whether the subject lands are serviced by sanitary sewer. Environmental constraints are also present.	Area 3 could be prioritized for development, as it is accessible and serviced. Environmental constraints are present.	Area 4 could be considered for subsequent development, as various environmental constraints are present.

3 ADDITIONAL LANDS

Fourteen additional areas were provided to the Town to be assessed and considered as part of this Study. The following section of this Addendum provides an assessment of each area and its potential suitability for residential and/or employment use in the Town.

3.1 0 NIGH ROAD

The subject lands located at 0 Nigh Road were provided to the Town for consideration as part of this Study.

Figure 2: 0 Nigh Road Subject Lands

ASSESSMENT SUMMARY

- Approximately 10.5ha in size.
- The subject lands are bound by Nigh Road to the north. To the east are existing single-detached dwellings that front onto Buffalo Road. To the south

is a wooded area and Dominion Road. To the west are existing single-detached dwellings and a partially wooded and cleared lot.

- The subject lands are located adjacent to the Crescent Park settlement area.
- The subject lands are currently designated as “Rural Area” under the Region’s Official Plan.
- The subject lands are currently designated as Rural under the Town’s Official Plan.
- The subject lands are currently zoned as Rural and Environmental Conservation Overlay under the Town’s Zoning By-law.
- The surrounding lands are designated as “Rural Area” and “Built-up Area” under the Region’s Official Plan.
- The surrounding lands are designated as Rural Residential and Urban Residential under the Town’s Official Plan.
- The surrounding lands are zoned as Rural Residential, Residential 1 and Environmental Conservation Overlay under the Town’s Zoning By-law.
- The subject lands are directly accessible from arterial road Nigh Road. The subject lands could potentially be accessible from easements located within the residential area to the east of the subject lands.
- There is existing servicing within close proximity to the subject lands, including a watermain and sanitary sewer that runs north-south along Buffalo Road. These services are located at the corner of Nigh Road and Buffalo Road, approximately 0.6km from the subject lands.
- Notable environmental constraints include Regional ECA designated features within the subject lands.
- As the subject lands are located adjacent to the Crescent Park settlement area, accessible via Nigh Road, have limited environmental constraints, and are within close proximity to existing water and sanitary servicing, they offer an opportunity to provide residential lands to accommodate the Town’s future growth.
- To have the subject lands available for residential use, the following is required:
    - Stakeholder consultation and Regional Official Plan Amendment to re-designate lands.
    - An Official Plan Amendment and Zoning By-law Amendment are required to re-designate lands.

  - An Environmental Impact Study is required.
- Consideration regarding land ownership and the potential opportunity for land assembly will be required prior to the development of the subject lands.

3.2 171 GORHAM ROAD

The subject lands located at 171 Gorham Road were provided to the Town for consideration as part of this Study.

Figure 3: 171 Gorham Road Subject Lands

ASSESSMENT SUMMARY

- Approximately 20.2ha in size.

- The subject lands are bound by Friendship Trail to the north, Gorham Road to the east, Farr Avenue to the south and a cleared lot to the west.
- The subject lands are located adjacent to Crystal Beach and Ridgeway-Thunder Bay settlement areas.
- The subject lands are currently designated as “Good General Agriculture Area” under the Region’s Official Plan.
- The subject lands are primarily designated as Agricultural under the Town’s Official Plan. Portions of the subject lands are currently designated as Commercial, Low Density Residential and Urban Residential.
- The subject lands are currently zoned as Agricultural, Environmental Conservation Overlay, Highway Commercial, and Residential under the Town’s Zoning By-law.
- The surrounding lands are designated as “Good General Agricultural Area” and “Built-up Area” under the Region’s Official Plan.
- The surrounding lands are designated as Agricultural, Open Space, Environmental Protection, Commercial, Urban Residential, Medium-High Density Residential, and Institutional under the Town’s Official Plan.
- The surrounding lands are zoned as Agricultural, Open Space, Environmental Conservation Overlay, Environmental Protection, Automotive Service Station, Highway Commercial, Institution, Residential, and Residential Multiple under the Town’s Zoning By-law.
- The subject lands are accessible from arterial roads Gorham Road and Farr Avenue.
- There is existing servicing to the subject lands, including a watermain and sanitary sewer that runs east-west along Farr Avenue, as well as a watermain and sanitary sewer that runs north-south along Gorham Road.
- Notable environmental constraints include NPCA Regulation Wetlands and Regional EPA designated features located just north of the subject lands. Within the subject lands are Regional ECA designated features. The wetland allowance also encroaches on the northern edge of the subject lands.
- As the subject lands are located adjacent to the Crystal Beach and Ridgeway-Thunder Bay settlement areas, are accessible via multiple arterial roads, are fully serviceable from the municipal water supply and sanitary sewer and are located within an area of existing mixed uses, they offer an opportunity to provide residential and/or employment lands to accommodate the Town’s

future growth. Further environmental study and agricultural assessment is required to understand the full potential of these lands.

- To have the subject lands available for residential use, the following is required:
    - Stakeholder consultation and Regional Official Plan Amendment to re-designate lands.
    - An Official Plan Amendment and Zoning By-law Amendment are required to re-designate lands.
    - An Agricultural Impact Assessment (AIA) referencing the OMAFRA Draft Agricultural Impact Assessment (AIA) Guidance Document (March 2018).
    - An Environmental Impact Study is required.
- Consider for a mix of residential and employment uses due to the existing variety of uses within the subject lands and surrounding area.
- For better access to the subject lands, the Town should also consider the lands south of the subject lands that front onto Farr Avenue. A preliminary assessment of the lands that front onto Farr Avenue, just south of the subject lands, identified the following:
    - Designated Urban Residential, Open Space and Commercial under the Town's Official Plan;
    - Zoned Environmental Conservation Overlay, Open Space, Residential 1 and Residential Multiple 2 under the Town's Zoning By-law; and
    - Environmental constraints include Regional ECA features.
- Consideration regarding land ownership and the potential opportunity for land assembly will be required prior to the development of the subject lands.

3.3 2900 COLLEGE ROAD

The subject lands referred to as 2900 College Road were provided to the Town for consideration as part of this Study. These subject lands comprise of ten parcels of land, as shown in Figure 10 below and are being considered for both residential and employment use.

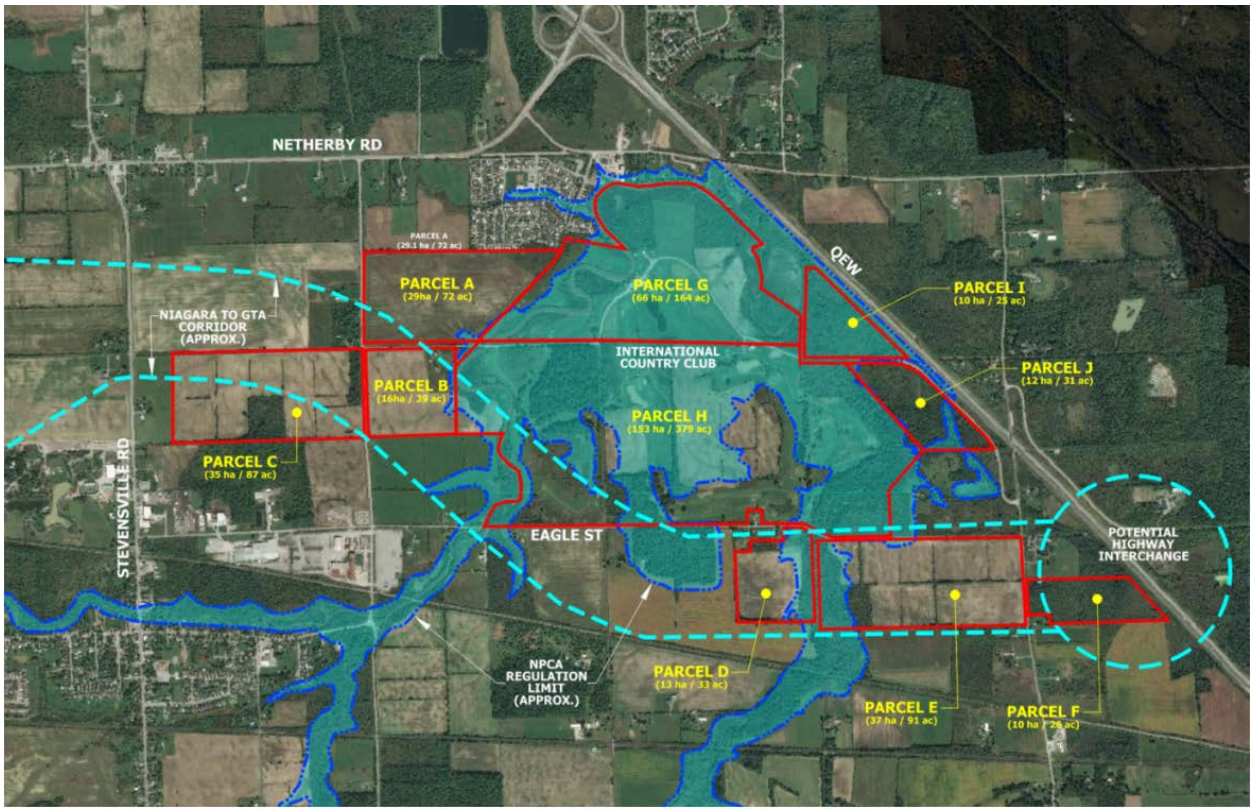

Figure 4: 2900 College Road Subject Lands (Bousfields Inc.)

ASSESSMENT SUMMARY

- Approximately 382ha total in size.
- The subject lands are generally bound by Netherby Road to the north, the QEW to the east, the CP Rail corridor to the south and Stevensville Road to the west.
- The subject lands are designated as “Good Agricultural Area” under the Region’s Official Plan. The surrounding areas are designated as “Good Agricultural Area” and “Built-up Area.”
- The subject lands are located within close proximity to the Stevensville and Douglastown settlement areas.

- Parcels A, B and C were previously evaluated as part of the Town's 2017 Industrial Land Development Strategy (ILDS) for employment use and were submitted to the Region for their consideration.
- The International Country Club of Niagara golf course is located within the subject lands, specifically within parcels G and H.
- The subject lands are located within the Mid-Peninsula Highway MTO Corridor, specifically parcels A, B, C, D, E, F and H. If plans for this proposed freeway proceed, this will greatly impact the development potentials of the subject lands.
- Parcel A (29ha) is primarily designated as Agricultural under the Town's Official Plan with a small southwestern portion designated as Environmental Protection. The parcel is primarily zoned Agricultural under the Town's Zoning By-law with a small southwestern portion zoned as Hazard. The surrounding lands are designated as Agricultural, Environmental Protection, Open Space and Medium-High Density Residential under the Town's Official Plan. The surrounding lands are zoned Agricultural, Environmental Open Space, Hazard, and Recreational Commercial under the Town's Zoning By-law. Parcel A is accessible from arterial roads Winger Road and College Road. There is partial servicing to the parcel, as a watermain runs north-south along Winger Road. There is currently no sanitary sewer service to the parcel, with the nearest servicing connection located at the intersection of Winger Road and Eagle Street, approximately 1km from the parcel. Notable environmental constraints include NPCA Regulated Floodplain Extent in the southeastern corner and surrounding area of the subject lands. Parcel A is partially located within the Mid-Peninsula Highway MTO Corridor.
    - As Parcel A is located adjacent to the Douglastown settlement area, is accessible via multiple arterial roads, and is partially serviceable with access to municipal water supply, it offers an opportunity to provide residential and/or employment lands to accommodate the Town's future growth. Municipal sanitary servicing is required to extend to the parcel. Further environmental study and agricultural assessment is required to understand the full potential of these lands.
- Parcel B (16ha) is primarily designated as Agricultural under the Town's Official Plan with lands designated as Environmental Protection along the eastern border. The parcel is primarily zoned Agricultural under the Town's Zoning By-law with Environmental Protection and Hazard zones located along the eastern border. The surrounding lands are designated as Agricultural, Environmental Protection and Industrial under the Town's Official Plan. The

surrounding lands are zoned Agricultural, Hazard, Environmental Protection, and Industrial under the Town's Zoning By-law. Parcel B is accessible from arterial roads Winger Road and College Road. There is partial servicing to the parcel, as a watermain runs north-south along Winger Road. There is currently no sanitary sewer service to the parcel, with the nearest servicing connection located at the intersection of Winger Road and Eagle Street, approximately 0.5km from the parcel. Notable environmental constraints include NPCA Regulated Floodplain as well as Regional ECA and EPA designated features. Nearly the entirety of parcel B is located within the Mid-Peninsula Highway MTO Corridor.

    - As Parcel B is located within close proximity to the Stevensville and Douglastown settlement areas, is accessible via multiple arterial roads, and is partially serviceable with access to municipal water supply, it offers an opportunity to provide residential and/or employment lands to accommodate the Town's future growth. Municipal sanitary servicing is required to extend to the parcel. Further environmental study and agricultural assessment is required to understand the full potential of these lands.

- Parcel C (35ha) is designated as Agricultural under the Town's Official Plan and zoned Agricultural under the Town's Zoning By-law. The surrounding lands are designated as Agricultural, Environmental Protection, Industrial under the Town's Official Plan. The surrounding lands are zoned Agricultural, Environmental Protection, and Industrial under the Town's Zoning By-law. Parcel C is accessible from arterial road Winger Road. There is partial servicing to the parcel, as a watermain runs north-south along Winger Road. There is currently no sanitary sewer service to the parcel, with the nearest servicing connection located at the intersection of Winger Road and Eagle Street, approximately 0.5km from the parcel. Notable environmental constraints include the presence of NPCA Regulation Wetland allowance along the southern edge of the subject lands due to the Regulation Wetland located to the south. There are also NPCA Approximate Regulation Lands located in the southeast corner of the subject lands. Nearly half of parcel C is located within the Mid-Peninsula Highway MTO Corridor.

    - As Parcel C is located adjacent to the Stevensville settlement area, is accessible via Winger Road, and is partially serviceable with access to municipal water supply, it offers an opportunity to provide residential and/or employment lands to accommodate the Town's future growth. Municipal sanitary servicing is required to extend to the parcel. Further

environmental study and agricultural assessment is required to understand the full potential of these lands.

- Parcel D (13ha) is currently designated as Agricultural and Environmental Protection under the Town's Official Plan and zoned as Agricultural, Hazard and Environmental Protection under the Town's Zoning By-law. The surrounding lands are designated as Agricultural and Environmental Protection under the Town's Official Plan. The surrounding lands are zoned Agricultural, Hazard, and Environmental Protection under the Town's Zoning By-law. Parcel D is accessible from arterial road Eagle Street. There is partial servicing to the parcel, as a watermain runs east-west along Eagle Street. There is currently no sanitary sewer service to the parcel, with the nearest servicing connection located at the intersection of Eagle Street and Winger Road, approximately 2km west of the parcel. Notable environmental constraints include NPCA Regulation Wetlands and Regulated Floodplain Extent, as well as Regional EPA designated features. The entirety of parcel D is located within the Mid-Peninsula Highway MTO Corridor.
    - Parcel D is located approximately 2km from the Stevensville settlement area, is accessible via Eagle Street, and is partially serviced via municipal water supply. Municipal sanitary servicing is required to extend to the parcel should they be considered for future development. Further environmental study and agricultural assessment is required to understand the full potential of these lands.
- Parcel E (37ha) is currently designated as Agricultural and Environmental Protection under the Town's Official Plan and zoned as Agricultural, Environmental Protection and Hazard under the Town's Zoning By-law. The surrounding lands are designated as Agricultural and Environmental Protection under the Town's Official Plan. The surrounding lands are zoned Agricultural, Environmental Protection and Hazard under the Town's Zoning By-law. Parcel E is accessible from arterial roads Eagle Street and Ridgemount Road. There is partial servicing to the parcel, as a watermain runs east-west along Eagle Street. There is currently no sanitary sewer service to the parcel, with the nearest servicing connection located at the intersection of Eagle Street and Winger Road, approximately 2.2km west of the parcel. Notable environmental constraints include NPCA Regulated Wetlands and Regulated Floodplain Extent, as well as Regional EPA designated features. The entirety of parcel E is located within the Mid-Peninsula Highway MTO Corridor.

  - Parcel E is located approximately 2.2km from the Stevensville settlement area, is accessible from arterial roads, and is partially serviced via municipal water supply. Municipal sanitary servicing is required to extend to the parcel should they be considered for future development. Further environmental study and agricultural assessment is required to understand the full potential of these lands.

- Parcel F (10ha) is currently designated as Agricultural under the Town's Official Plan and zoned as Agricultural and Environmental Conservation Overlay under the Town's Zoning By-law. The surrounding lands are designated as Agricultural under the Town's Official Plan and zoned Agricultural and Environmental Protection Overlay under the Town's Zoning By-law. Parcel F is accessible from arterial road Ridgemount Road. There is currently no servicing available to the parcel. The closest watermain is located along Eagle Street, approximately 0.3km from the parcel. The closest sanitary sewer service to the parcel is located at the intersection of Eagle Street and Winger Road, approximately 3.2km west of the parcel. Notable environmental constraints include NPCA Approximate Regulation Lands within the southeastern edge of the subject lands, as well as Regional ECA and EPA designated features. The entirety of parcel F is located within the Mid-Peninsula Highway MTO Corridor.
  - Parcel F is located approximately 3.2km from the Stevensville settlement area and is accessible via Ridgemount Road. There is currently no municipal servicing available to this parcel, which would be required for future development. Further environmental study and agricultural assessment is required to understand the full potential of these lands.
- Parcel G (66ha) is currently designated as Environmental Protection and Open Space under the Town's Official Plan and zoned as Environmental Protection, Hazard and Existing Open Space under the Town's Zoning By-law. The surrounding lands are designated as Agricultural, Environmental Protection, Open Space, Low Density Residential, Medium-High Density Residential, and Commercial under the Town's Official Plan. The surrounding lands are zoned Agricultural, Hazard, Environmental Protection, Residential, Recreational Commercial, and Highway Commercial under the Town's Zoning By-law. Parcel G is accessible from arterial roads College Road and Sider Road. There is currently no servicing available to the parcel. The most accessible watermain connection is located at the intersection of Winger Road and College Road, approximately 0.5km from the parcel. There are also watermains located north and northwest of the parcel along Townline Road

and within a residential subdivision (respectively), which are located approximately 0.2km from the parcel, but would require passing through occupied lots. The closest sanitary sewer service is located within a residential subdivision, approximately 0.2km northwest of the parcel, but would require passing through occupied lots. Further analysis would be required to determine the capacity of this sanitary sewer. There is also a sanitary sewer connection located at the intersection of Eagle Street and Winger Road, located approximately 1.5km southwest of the parcel. Nearly the entire parcel contains environmental constraints, including NPCA Regulation Wetlands and Regulation Floodplain Extent, as well as Regional ECA and EPA designated features. Parcel G is located within the existing International Country Club of Niagara golf course.

    - Although Parcel G is located adjacent to the Douglastown settlement area, accessible via multiple arterial roads and surrounded by an existing mix of uses, due to the extensive environmental constraints and lack of municipal servicing, it is recommended that this parcel be deferred for potential future development. Further environmental assessment and study is required to understand the full potential of these lands.

- Parcel H (153ha) is currently designated as Environmental Protection, Agricultural, and Open Space under the Town's Official Plan. The parcel is zoned Environmental Protection, Agricultural, Hazard, and Existing Open Space under the Town's Zoning By-law. The surrounding lands are designated as Environmental Protection, Agricultural, and Open Space under the Town's Official Plan. The surrounding lands are zoned Environmental Protection, Hazard, Agricultural, and Existing Open Space under the Town's Zoning By-law. Parcel H is accessible from arterial roads College Road, Sider Road and Eagle Street. There is partial servicing to the parcel, as a watermain runs east-west along Eagle Street. There is currently no sanitary sewer service to the parcel, with the nearest servicing connection located at the intersection of Eagle Street and Winger Road, approximately 0.5km west of the parcel. There are extensive environmental constraints, including Regulation Wetlands and Approximate Regulation Lands, as well as Regional ECA and EPA designated features. Parcel H is partially located within the Mid-Peninsula Highway MTO Corridor. Parcel H is located within the existing International Country Club of Niagara golf course.

    - Parcel H is located within 1km of the Douglastown and Stevensville settlement areas, is accessible via arterial roads, and is partially serviced. However, due to environmental constraints and a lack of

sanitary sewer service, it is recommended that this parcel be deferred at this time. As this parcel is not located adjacent to a settlement area, it could be considered through future phasing if other parcels within the subject lands, such as Parcels A, B and C are included in a UAB expansion. Further agricultural assessment and environmental study is required to understand the full potential of these lands.

- Parcel I (10ha) is currently designated as Environmental Protection under the Town's Official Plan and zoned as Hazard and Environmental Protection under the Town's Zoning By-law. The surrounding lands are designated as Environmental Protection and Agricultural under the Town's Official Plan. The surrounding lands are zoned Hazard, Environmental Protection, and Agricultural under the Town's Zoning By-law. Parcel I is accessible from arterial road College Road and located adjacent to the QEW. There is currently no servicing available to the parcel. The most accessible watermain runs east-west along Eagle Street, approximately 1.2km from the parcel. The closest sanitary sewer service is located at the intersection of Eagle Street and Winger Road, approximately 4.2km southwest of the parcel. The entirety of the parcel contains environmental constraints, including NPCA Regulation Wetlands and Regulated Floodplain Extent, as well as Regional ECA and EPA designated features.
    - Parcel I is located within 1km of the Douglastown settlement area and is accessible via College Road. However, due to the extensive environmental constraints and lack of municipal servicing, it is not recommended that this parcel be prioritized for potential future development. Further environmental assessment and study is required to understand the full potential of these lands.
- Parcel J (13ha) is currently designated as Agricultural and Environmental Protection under the Town's Official Plan. This parcel is zoned Agricultural, Environmental Protection, Environmental Conservation Overlay, and Hazard under the Town's Zoning By-law. The surrounding lands are designated as Environmental Protection and Agricultural under the Town's Official Plan. The surrounding lands are zoned Agricultural, Environmental Conservation Overlay, Environmental Protection, and Hazard under the Town's Zoning By-law. The subject lands are accessible from arterial road College Road and is located adjacent to the QEW. The most accessible watermain runs east-west along Eagle Street, approximately 0.5km from the parcel. The closest sanitary sewer service is located at the intersection of Eagle Street and Winger Road, approximately 3.5km southwest of the parcel. Notable environmental

constraints include NPCA Regulation Wetlands and Regulated Floodplain Extent, as well as Regional ECA and EPA designated features.

  - Parcel J is located approximately 1km of the Douglastown settlement area and is accessible via College Road. However, due to lack of municipal servicing and potential environmental constraints, it is not recommended that this parcel be prioritized for potential future development. Further agricultural assessment and environmental study is required to understand the full potential of these lands.

- To have the subject lands available for residential and potentially employment use, the following is required:
  - Stakeholder consultation and Regional Official Plan Amendment to re-designate lands.
  - An Official Plan Amendment and Zoning By-law Amendment are required to re-designate lands.
  - Decision regarding the Mid-Peninsula Highway MTO corridor. Should this not be removed, it would be difficult to develop Parcels B, D, E and F. If plans for this proposed freeway proceed, this will greatly impact the development potentials for Parcels A, C, and H as they are partially located within the corridor. Should the proposed freeway proceed, it could provide an opportunity for better access to Parcels A, C, G, H, I and J.
  - An Agricultural Impact Assessment (AIA) referencing the OMAFRA Draft Agricultural Impact Assessment (AIA) Guidance Document (March 2018). This is required for Parcels A, B, C, D, E, F, H and J.
  - An Environmental Impact Study is required for all parcels within the subject lands.
  - Provide sanitary sewer service to all parcels within the subject lands.
  - Provide municipal water supply to Parcels F, G, I and J.
- As there is currently no municipal sanitary service to any of the parcels within the subject lands, this would require significant investment from the Town.
- If multiple or all parcels from the subject lands are to be used for future residential and/or employment use, it is recommended that the Town phase the development of these lands according to location and access, existing servicing and potential constraints. It is recommended that Parcels A and C be prioritized as they are both located adjacent to an existing settlement area, are accessible via arterial roads, show fewer environmental constraints and are partially serviced.

- Consideration regarding land ownership and the potential opportunity for land assembly will be required prior to the development of the subject lands.

3.4 SCHOOLEY ROAD

The subject lands located at Schooley Road were provided to the Town for consideration as part of this Study. The proposed development of Beachwalk II has been submitted to the Town for these subject lands.

Figure 5: Schooley Road Subject Lands

ASSESSMENT SUMMARY

- Approximately 8.32ha in size.
- The subject lands are bound by Michener Road to the north, Schooley Road to the east, Rebstock Road to the south and an existing agricultural use to the west.
- The subject lands are located adjacent to the Crystal Beach settlement area.
- The subject lands are currently designated as “Good General Agriculture Area” under the Region’s Official Plan.
- The subject lands are currently designated as Agricultural under the Town’s Official Plan.

- The subject lands are currently zoned as Agricultural under the Town's Zoning By-law.
- The surrounding lands are designated as "Good General Agricultural Area" and "Built-up Area" under the Region's Official Plan.
- The surrounding lands are designated as Agricultural and Urban Residential under the Town's Official Plan.
- The surrounding lands are zoned as Agricultural, Residential, Neighbourhood Development, and Environmental Conservation Overlay under the Town's Zoning By-law.
- The subject lands are located within the priority candidate lands Ridgeway-Crystal Beach Area 1.
- The subject lands are accessible from arterial roads Michener Road and Schooley Road, as well as local road Rebstock Road.
- There is existing servicing to the subject lands, including a watermain and sanitary sewer that runs east-west along Rebstock Road. There is also a watermain that runs north-south along Schooley Road. As part of the approvals for the Beachwalk subdivision, a storm sewer will be extended northerly along Schooley Road from Glenspring Road to the subject lands.
- There are no notable environmental constraints present within the subject lands.
- As the subject lands are located adjacent to the Crystal Beach settlement area, are accessible via multiple arterial roads, are fully serviceable from the municipal water supply and sanitary sewer, and do not have environmental constraints, they offer an opportunity to provide residential lands to accommodate the Town's future growth. Further agricultural assessment is required to understand the full potential of these lands.
- To have the subject lands available for residential use, the following is required:
    - Stakeholder consultation and Regional Official Plan Amendment to re-designate lands.
    - An Official Plan Amendment and Zoning By-law Amendment are required to re-designate lands.
    - An Agricultural Impact Assessment (AIA) referencing the OMAFRA Draft Agricultural Impact Assessment (AIA) Guidance Document (March 2018).

  - A Minimum Distance Separation (MDS 1) assessment may be required due to current land uses.

- These lands were identified in the original study within the Ridgeway-Crystal Beach Area 1. This area has been prioritized for future development and was submitted to the Region under the Urban Boundary Expansion Study – Interim Report.
- Consideration regarding land ownership and the potential opportunity for land assembly will be required prior to the development of the subject lands.

3.5 SUNSET ROAD

The subject lands located at Sunset Road were provided to the Town for consideration as part of this Study.

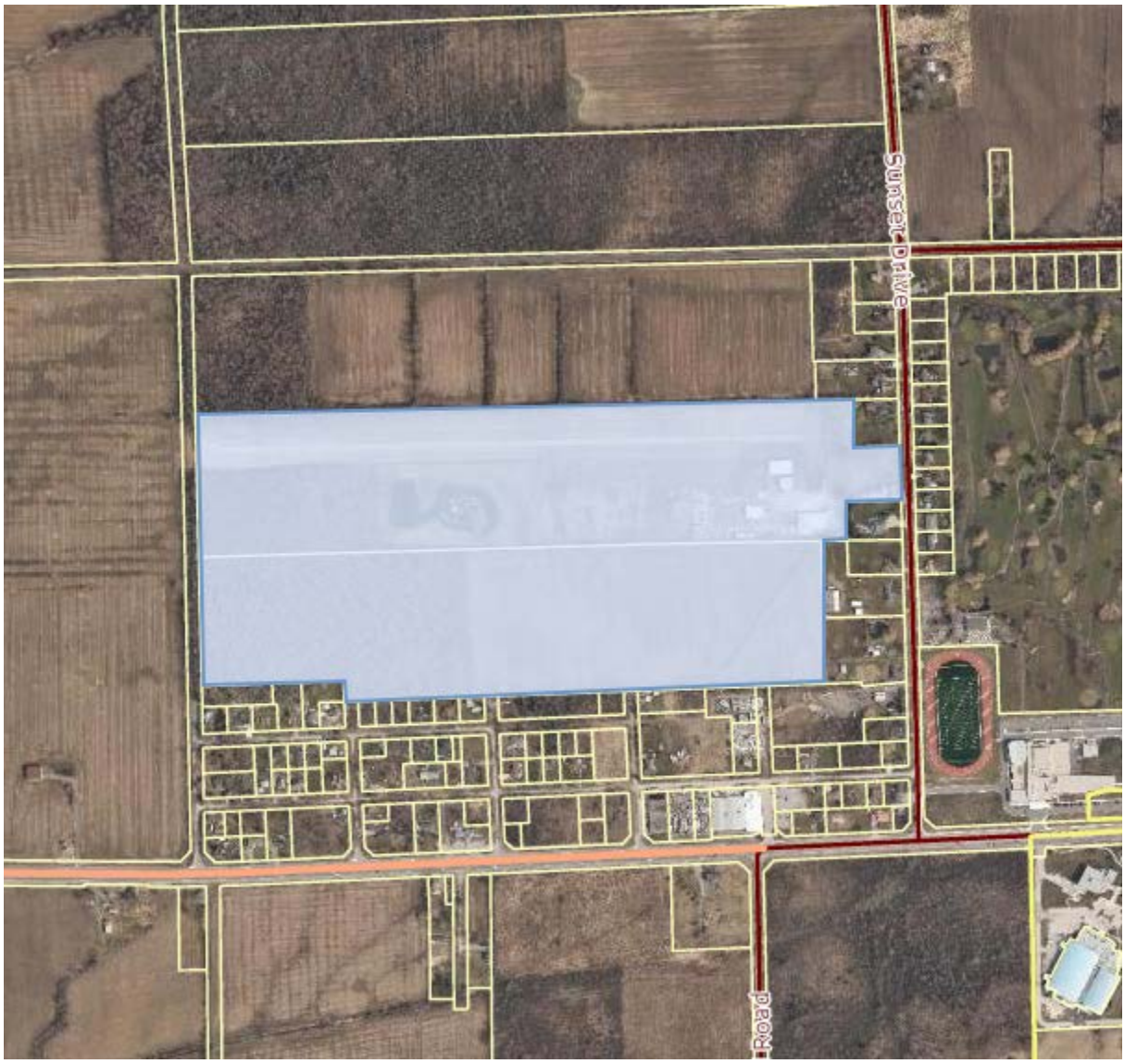

Figure 6: Sunset Road Subject Lands

ASSESSMENT SUMMARY

- Approximately 38ha in size.
- The subject lands are bound by an agricultural lot and Bertie Street to the north. To the east are existing single-detached dwellings, accessory structures and Sunset Drive. To the south are existing single-detached dwellings, cleared lots, a vehicle storage lot and local roads. To the west is an agricultural lot.

- There are existing structures and materials associated with an excavating contractor located within the subject lands.
- The subject lands are not located adjacent to a settlement area, and are located within 1km to the Crescent Park and Spears-High Pointe settlement areas.
- The subject lands are currently designated as “Good General Agriculture Area” under the Region’s Official Plan.
- The subject lands are currently designated as Agricultural and Environmental Protection under the Town’s Official Plan.
- The subject lands are currently zoned as Agricultural and Environmental Protection under the Town’s Zoning By-law.
- The surrounding lands are designated as “Good General Agricultural Area” under the Region’s Official Plan.
- The surrounding lands are designated as Agricultural, Environmental Protection, Rural, and Rural Residential under the Town’s Official Plan.
- The surrounding lands are zoned as Agricultural, Environmental Protection, Rural, Rural Residential, and Rural Commercial under the Town’s Zoning By-law.
- The subject lands are accessible from arterial road Sunset Drive. There is also potential to access the western portion of the subject lands by extending a Garrison Road to the north, through an unopened road allowance.
- There is partial servicing to the subject lands, including an existing watermain that runs north-south along Sunset Drive and watermains located along local roads within close proximity to the subject lands. There is currently no sanitary sewer service available, with the closest sanitary sewer located on Garrison Road approximately 0.8km from the subject lands.
- Notable environmental constraints include NPCA Regulated Wetlands and Regional ECA and EPA designated features.
- The subject lands are located within close proximity to the Crescent Park and Spears-High Pointe settlement areas, are accessible via Sunset Drive, and are serviceable from the municipal water supply. However, due to the lack of sanitary sewer service and notable environmental constraints, they are considered a lower priority regarding its potential to accommodate the Town’s future growth. Further environmental study and agricultural assessment is required to understand the full potential of these lands.

- To have the subject lands available for residential use, the following is required:
    - Stakeholder consultation and Regional Official Plan Amendment to re-designate lands.
    - An Official Plan Amendment and Zoning By-law Amendment are required to re-designate lands.
    - An Agricultural Impact Assessment (AIA) referencing the OMAFRA Draft Agricultural Impact Assessment (AIA) Guidance Document (March 2018).
    - An Environmental Impact Study is required.
    - Extend sanitary sewer service to the subject lands.
- Due to the environmental constraints within the western portion of the subject lands, there is a potential to phase the development of the subject lands to prioritize the eastern portion, which is accessible via Sunset Drive.
- As the subject lands are not located adjacent to an UAB, they should be considered as a deferred option for the Town. There is potential for the subject lands to be considered with other lands between Highway 3, Bertie Street and Laur Road.
- Consideration regarding land ownership and the potential opportunity for land assembly will be required prior to the development of the subject lands.

3.6 SUMMARY TABLE

A summary of the additional lands is outlined on the following page in Table 3.

Table 3: Summary Table – Additional Lands

	0 Nigh Road	171 Gorham Road	2900 College – Parcel A	2900 College – Parcel B	2900 College – Parcel C	2900 College – Parcel D	2900 College – Parcel E	2900 College – Parcel F	2900 College – Parcel G	2900 College – Parcel H	2900 College – Parcel I	2900 College – Parcel J	Schooley Road	Sunset Road
Size (Gross)	10.5ha	20.2ha	29ha	16ha	35ha	13ha	37ha	10ha	66ha	153ha	10ha	13ha	8.32ha	38ha
Future Residential or Employment Use	Residential	Residential	Employment	Employment	Employment	Residential	Residential	Residential	Residential	Residential	Residential	Residential	Residential	Residential
Agricultural Designation	N/A	Yes	Yes	Yes	Yes	Yes	Yes	Yes	N/A	Yes	No	Yes	Yes	Yes
Environmental Constraints	Regional ECA features	NPCA Regulation Wetlands, Regional EPA features	NPCA Regulated Floodplain Extent	NPCA Regulated Floodplain, Regional ECA and EPA features	NPCA Approximate Regulation Lands	NPCA Regulation Wetlands, Regional EPA features	NPCA Regulated Wetlands, Regional EPA features	Regional ECA and EPA features	NPCA Regulation Wetlands, Regional ECA and EPA features	NPCA Regulation Wetlands, Regional ECA and EPA features	NPCA Regulation Wetlands, Regional ECA and EPA features	NPCA Regulation Wetlands, Regional ECA and EPA features	No notable constraints	NPCA Regulated Wetlands, Regional ECA and EPA features
Access	Arterial	Arterials	Arterials	Arterials	Arterial	Arterial	Arterials	Arterial	Arterials	Arterials	Arterial	Arterial	Arterials	Arterial
Servicing	Water and sanitary within 0.6km	Water and sanitary	Water, no sanitary	Water, no sanitary	Water, no sanitary	Water, no sanitary	Water, no sanitary	Not serviced	Not serviced	Water, no sanitary	Not serviced	Not serviced	Water and sanitary	Water, no sanitary
Required Studies and Considerations	EIS	EIS, AIA	EIS, AIA, Mid-Peninsula MTO Corridor	EIS, AIA, Mid-Peninsula MTO Corridor	EIS, AIA, Mid-Peninsula MTO Corridor	EIS, AIA, Mid-Peninsula MTO Corridor	EIS, AIA, Mid-Peninsula MTO Corridor	EIS, AIA, Mid-Peninsula MTO Corridor	EIS, International Country Club of Niagara	EIS, AIA, International Country Club of Niagara, Mid-Peninsula MTO Corridor	EIS	EIS, AIA	AIA	EIS, AIA
Development Approach	Extend municipal servicing and complete required studies.	Complete required studies.	Priority phase for these subject lands. Dependent on MTO corridor and required studies.	Priority phase for these subject lands. Dependent on MTO corridor and required studies.	Priority phase for these subject lands. Dependent on MTO corridor and required studies.	Extend municipal servicing, dependent on MTO corridor and required studies.	Extend municipal servicing, dependent on MTO corridor and required studies.	Extend municipal servicing, dependent on MTO corridor and required studies.	Extend municipal servicing and complete required studies.	Extend municipal servicing, dependent on MTO corridor and required studies.	Deferred phase for these subject lands. Extend municipal servicing and complete required studies.	Deferred phase for these subject lands. Extend municipal servicing and complete required studies.	Complete required studies.	Extend municipal servicing and complete required studies.

4 FINAL RECOMMENDATIONS

Following the analysis of the thirteen candidate lands and additional five areas, the updated recommendations for the Town's considerations is outlined below in Tables 4 and 5.

Table 4: Prioritized Subject Lands - Residential

Priority	Subject Land/Area	Size
1	Ridgeway-Crystal Beach, Area 1 (including Schooley Road)	11.0ha
1	Ridgeway-Crystal Beach, Area 3	10.3ha
2	171 Gorham Road	20.2ha
3	0 Nigh Road	10.5ha
4	Ridgeway-Crystal Beach, Area 4	0.5ha
5	Ridgeway-Crystal Beach, Area 2	3.6ha
6	Spears High Pointe-Crescent Park, Area 4	0.8ha
7	Spears High Pointe-Crescent Park, Area 2	19.7ha
8	Spears High Pointe-Crescent Park, Area 1	43.5ha
9	Spears High Pointe-Crescent Park, Area 3	3.8ha
10	Sunset Road	38.0ha
11	Stevensville	210.0ha
12	2900 College Road, Parcel H	153.0ha
13	2900 College Road, Parcel G	66.0ha
14	2900 College Road, Parcel E	37.0ha
15	2900 College Road, Parcel D	13.0ha
16	2900 College Road, Parcel F	10.0ha
17	2900 College Road, Parcel J	13.0ha
18	2900 College Road, Parcel I	10.0ha
	TOTAL	**673.9ha**

Table 5: Prioritized Subject Lands - Employment

Priority	Subject Land/Area	Size
1	CMS Lands	346.0ha
2	QEW and Bowen Road	151.4ha
3	Eagle Street	98.0ha
4	2900 College Road, Parcel A	29.0ha
5	2900 College Road, Parcel C	35.0ha
6	2900 College Road, Parcel B	16.0ha
7	QEW Lands	26.0ha
	TOTAL	**701.4ha**

Planning and Development Services

Prepared for	Regular Council	**Report No.**	PDS-15-2021
Agenda Date	February 22, 2021	**File No.**	350308-0112, 350302-046 & 350309-478

Subject

PROPOSED DRAFT PLAN OF SUBDIVISION AND AMENDMENT TO TOWN OF FORT ERIE OFFICIAL PLAN AND ZONING BY-LAW 129-90 – ROYAL RIDGE PHASE 2 – 613 RIDGE ROAD NORTH
ROYAL OAK PROPERTY DEVELOPMENTS C/O BRENT KING (OWNER)
KLM PLANNING PARTNERS INC. (AGENT)

Recommendation

THAT Council approves the Royal Ridge Phase 2, Draft Plan of Subdivision dated June 11, 2020, showing a block for a 4 storey 40 unit apartment building, 3 blocks for 3 semi-detached dwellings, a lot for a single detached dwelling, a block for the park and a block for environmental protection area, as shown in **Appendix "3"** of Report No. PDS-15-2021, in accordance with the provisions of the *Planning Act R.S.O. 1990 c.P. 13* and the Regulations thereunder, subject to the conditions contained in **Appendix "7"** of Report No. PDS-15-2021,and further

THAT Council directs staff to circulate the Conditions of Draft Plan Approval in **Appendix "7"** of Report No. PDS-15-2021 to the applicable agencies in accordance with the requirements of the *Planning Act*, and further

THAT Council approves the amendments to the Town's Official Plan for Royal Ridge Subdivision as detailed in **Appendix "5"** of Report No. PDS-15-2021, and further

THAT Council approves the amendments to the Town's Zoning By-law No. 129-90 as detailed in **Appendix "6"** of Report No. PDS-15-2021 for the Royal Ridge Phase 2 Subdivision, and further

THAT Council directs staff to prepare the necessary by-laws.

Relation to Council's 2018-2022 Corporate Strategic Plan

Priority: Managed Growth through Responsibility, Stewardship and Preservation

List of Stakeholders

Residents and Property Owners in Fort Erie
Royal Oak Property Developments

Prepared by:	Submitted by:	Approved by:
Original Signed	*Original Signed*	*Original Signed*
Anamika Dilwaria, M.Pl, MCIP, RPP Senior Development Planner	Kira Dolch, MCIP, RPP, CNU-A Director, Planning and Development Services	Tom Kuchyt, C.E.T. Chief Administrative Officer

Purpose

The purpose of this report is to provide a recommendation to Council on the proposed Draft Plan of Subdivision, Official Plan and Zoning By-law amendment for the lands known as 613 Royal Ridge North. An application for a Draft Plan of Subdivision and Combined Official Plan and Zoning By-law amendment was submitted by KLM Planning Partners, Agent for Royal Oak Property Developments c/o Brent King, owners of the subject property known as 613 Royal Ridge North.

Background

On February 19, 2019, an Information Report PDS-10-2019, regarding applications for a Draft Plan of Subdivision and Amendment to the Town's Official Plan and Comprehensive Zoning By-law 129-90 was presented to Council.

The applications were submitted for Royal Ridge Subdivision - Phase 2 by Royal Oak Property Developments (Brent King), owner of the subject property located at 613 Ridge Road North. A location map showing the area subject to the applications is attached as **Appendix "1"**. The applicant was requesting to subdivide 1.35 hectares of land known as 613 Ridge Road North into a lot for 1 single detached dwelling, three lots for 3 semi-detached dwellings (6 dwelling units), a block for a 7-storey, 40-unit apartment building, a block for environmental protection and a block for a park.

The applicant was also requesting to re-designate the subject lands to Residential – Medium Density, in part, to permit the proposed 7-storey apartment building,

Environmental Protection, in part, to protect the existing natural heritage feature on-site and Open Space, in part, for the construction of a future park.

Lastly, an amendment to the Zoning By-law was requested to rezone the lands to Residential 2 (2A) Zone, in part, to permit a single detached dwelling, Residential 3 (R3) Zone, to permit 3 semi-detached dwellings (6 dwelling units), Open Space (OS) Zone, to permit the park, Environmental Protection (EP) to protect the natural heritage features and lastly site-specific Residential Multiple 2 (RM2) Zone to permit a 7-storey, 40-unit apartment building. Site-specific regulations were requested for an increase in building height, lot coverage, maximum projection of balconies, porches and canopies, and a reduction to the minimum interior side yard, minimum exterior side yard, minimum rear yard and minimum landscaped area.

As detailed in PDS-10-2019, Staff requested further information related to the proposed 7-storey apartment building (i.e., building elevations, visual impact assessment including a shadow study). It was indicated to Council and the public at that time that additional public consultation would take place following the submission of this additional material. As detailed below, the following input received at the previous Public Meeting, the applicant has revised the apartment building proposal to 4 storeys. Staff recommended to the applicant that an additional Public Meeting be held to present the revised proposal to the public and Council prior to a recommendation being made.

Current Proposal

To address the concerns raised at the February 2019 Public Meeting, the applicant revised the proposal and is now proposing a 4-storey apartment building instead of a 7-storey apartment building previously proposed. Site-specific regulations are now being requested for a reduction to the minimum lot area (per unit), minimum side yard, minimum rear yard and minimum exterior side yard provisions of the Zoning By-law No. 129-90. The unit count for the apartment building remains at 40. A new Public Meeting was held for the revised proposal on August 31, 2020, accompanied by Staff Information Report PDS-36-2020.

Other changes to the application include an increase to the Environmental Protection block in order to provide for a requested 30 metre buffer from the adjacent wetland due to possible wildlife habitat; as well as other minor revisions to the configuration of the public road allowance and park block to address Staff comments. All other aspects of the development proposal remain unchanged from the initial submission. The proposed Draft Plan of Subdivision is included as **Appendix "3"**. A Site Plan showing more detail on how the apartment block would be developed is included as **Appendix "2"**. Building elevations and a visual impact assessment/shadow study are no longer being requested as the Secondary Plan notes these studies as being required to demonstrate compatibility when a building is beyond 4 storeys.

The purpose of this report is to provide a recommendation on the proposed Draft Plan of Subdivision and Combined Official Plan and Zoning By-law amendments.

Nature of the Site

The subject property is located in the Ridgeway / Thunder Bay Neighbourhood. A location plan is included as **Appendix "1"** to this report. The subject property is located on the west side of Ridge Road North, approximately 150 m north of Hazel Street across from the former Ridgeway Crystal Beach Secondary School. The subject property is currently occupied by a single detached dwelling. The area of the property adjacent to the dwelling is the future site of the sales centre for Phase 1 of the Royal Ridge Subdivision.

The following are the land uses surrounding the subject property:

North: Royal Ridge Subdivision Phase 1 is draft plan approved for 27 lots for townhouse dwellings and 12 lots for semi-detached dwellings in November 2016 (Subdivision Agreement authorized November 2019)
South: Single-detached dwellings and vacant residential land.
East: Ridge Road North and former Ridgeway Crystal Beach Secondary School.
West: Single-detached dwelling and contractor's yard.

Planning Context

Provincial Policy Statement

Staff reviewed the Provincial Policy Statement in its entirety and note that this application is consistent with the vision for Ontario's Land Use Planning System outlined in Part IV of the Provincial Policy Statement (PPS), namely to focus future growth and development within existing urban settlement areas and to promote efficient development patterns that optimize the use of land, resources and infrastructure.

Planning Staff believe that this location is appropriate for intensification, and a 4-storey apartment building will integrate into the neighbourhood fabric.

An Environmental Impact Study was completed in support of the applications associated with Phase 1 of the subdivision. An addendum to the EIS was submitted with this application to assist with the assessment of the proposal's conformity with Provincial Natural Heritage Policies and is consistent with the PPS. Further discussion of the EIS is included in greater detail in the 'Studies' section of this report.

Growth Plan for the Greater Golden Horseshoe

The subject properties are within the *delineated built boundary* as identified in the Growth Plan for the Greater Golden Horseshoe. The proposal is consistent with the policies outlined in the Growth Plan, as the subject property is within the existing urban settlement area for Fort Erie, and have planned access to full municipal services. Further, the proposal will aid the Town to meet its 15% intensification target.

Niagara Region Official Plan

The Regional Official Plan identifies the subject lands as Built-Up Area in the Urban Area Boundary of Fort Erie. This Draft Plan of Subdivision, Official Plan and Zoning By-law amendment meet the Regional objectives of directing development within the existing urban boundaries first to ensure efficient use of land and infrastructure. This proposal is also consistent with Regional Intensification policies as it contributes to the achievement of residential intensification targets. Regional Environmental Planning staff were previously unable to support the Draft Plan of Subdivision as development/site alteration was proposed within the confirmed habitat of Blanding's Turtle (i.e., within 30 metres of the adjacent Provincially Significant Wetland). However, the Regional staff are now supportive of the updated Draft Plan of Subdivision, prepared by KLM Planning, that shows the enlarged EPA block (Block 6) with the requested 30 metre buffer, from the Blanding's Turtle Habitat identified in the Environmental Impact Study (EIS).

Official Plan and Ridgeway / Thunder Bay Secondary Plan

The subject lands are designated Residential – Low Density, Open Space and Environmental Conservation on Schedule A of the Official Plan and RTB-2 Land Use Plan in the Ridgeway-Thunder Bay Secondary Plan.

The applicant is requesting to re-designate a portion the lands from Low Density to Medium Density to permit an apartment building and semi-detached dwellings and Environmental Conservation to Environmental Protection to provide a 30 metre buffer from the Provincially Significant Wetlands (PSW). The proposal will maintain the Open Space designation to allow a future park and Low-Density designation to permit a single-detached dwelling.

The applicant's request to re-designate a portion of the lands as Medium Density Residential will permit the proposed 4 storey 40 unit apartment building with a maximum residential density of 121.5 units per hectare.

Residential developments within the Secondary Plan are subject to policies outlined in Section 4.7 of the Official Plan. Section 4.7.1 I a) encourages higher residential densities to minimize land consumption. Section 4.7.1 I b) encourages a housing mix of low, medium and high densities. The applicant's proposal is consistent with the policies as it proposes a mix of housing type by providing a 40 unit apartment building, 3 semi-

detached dwellings and a single-detached dwelling. Section 4.7.1 III) encourages residential intensification in urban areas that have existing and planned infrastructure. The proposed development can be accommodated by the existing and proposed infrastructure. Lastly Section 4.7.1 IV) encourages housing forms and densities that are designed to be affordable to moderate- and lower-income households. The applicant's proposal for an apartment building may also provide opportunities for more affordable housing options within the community.

The applicant's request to re-designate a portion of the subject lands from the Low Density to Medium Density is also subject to policies outlined in Section 4.18.7 b) of Ridgeway Thunder Bay Secondary Plan. Section 4.18.7 b) allows the development with a density between 25-75 units per hectare in the Medium Density designation. The proposed density of the apartment building will be 121.5 units per hectare; therefore, a Special Policy Area within the Ridgeway-Thunder Bay Secondary Plan area is requested to accommodate the proposal. Though the density is more than what was envisioned in the Ridgeway-Thunder Bay Secondary Plan area, the proposed density can be supported for the following reasons:

- Based on the Traffic Report submitted by the applicant, additional traffic generated by the proposed development will have no negative impact on the level of service of Ridge Road;
- The Functional Servicing Study provided by the applicant confirms that the proposed development can be supported by the existing and proposed infrastructure;
- Sufficient parking spaces and landscaped area is provided on-site for the future residents; and
- Lastly, the building design and setbacks proposed for the apartment building are generally consistent with the Town's zoning requirements.

Policy 4.18.5 c) states "The Plan provides for initial areas of Low and Medium density residential that promotes age-in-place opportunities, meets provincial intensification targets, supports the Downtown village environment and walkable communities. Other locations for increased densities will only be considered by demonstration of land use compatibility and compliance with the criteria provided for under Sections 13.10.2 and 4.18.7 d)." The proposed Official Plan and Zoning By-law Amendment are consistent with the requirements of Policy 4.18.7 d) as described below.

Section 4.18.7 d) provides that additional medium-density areas will be considered by zoning by-law amendment for areas meeting one or more criteria:

a) within walking distance to the Downtown Core Mixed-Use;
b) within walking distance to the Gorham Commercial Gateway;
c) preferably along arterial and collector roads within the Plan Area;
d) in close proximity to amenity spaces such as Parks, Open Space/Trails or Natural Feature Areas.

The proposal to add medium density development is consistent with this policy as the development is immediately adjacent to a park and Provincially Significant Wetland and is generally within walking distance to the Downtown Core Mixed Use area; meeting one or more of the above criteria. Though the proposed development does not front on an arterial or a collector road, the development has convenient access to Ridge Road, which is a collector road.

Policy 4.18.7 g) encourages buildings with a maximum building height of 4 storeys. The applicant has revised the proposal to conform with the Official Plan in this regard.

Currently, the southwest corner of the site is designated Open Space. The proposed Official Plan Amendment will align the Open Space designation with the proposed park.

Lastly, the proposed Official Plan Amendment will also re-designate the area located at the north-west corner of the property (identified as Block 6 on the Draft Plan of Subdivision and located with the 30 metre buffer from the PSW) as Environmental Protection. Policies outlined in Section 8 of the Official Plan apply to the Natural Heritage resources within Ridgeway-Thunder Bay Secondary Plan Area. Policy 8.3 outlines the requirements for development within and adjacent to Environmental Conservation Areas. The Policy requires completion of an Environmental Impact Study (EIS) to justify a proposed development in accordance with the policies of the Official Plan. The policy also requires the Region and Conservation Authority to be consulted with respect to the review.

The proposal is consistent with this policy as the applicant has completed an EIS which has been satisfactorily reviewed by the Region and the Conservation Authority. Further, the applicant is proposing to maintain a 30 metre buffer from the PSW, as recommended in the EIS. The 30 metre buffer would not only ensure that there are no impact on the PSWs but would also ensure the protection of potential Blanding Turtles habitat in this area. Further, the applicant has re-designed Block 6 on the Draft Plan of Subdivision (**Appendix "3")** to reflect the 30 metre buffer. Block 6 will be re-designated from Environmental Conservation to Environmental Protection.

The proposal is also consistent with Section 8.2.1 of the Official Plan which outlines policies related to PSWs. The policy states that development and site alteration shall not be permitted unless it has been demonstrated that there will be no negative impacts to the wetlands features and their ecological functions. Further discussion of comments received from the Niagara Region, NPCA and Environmental Advisory Committee (EAC) relating to PSWs is included in the 'Studies' section of this report.

The proposed amendment will remove the Environmental Conservation designation from the remaining portion of the property and will re-designate the lands to Medium Density Residential. The Low Density designation will be maintained for the portion of the property fronting onto Ridge Road, to allow the construction of a single detached dwelling and the Open Space designation will be maintained for the future park.

Zoning By-law No. 129-90

The lands are currently zoned Neighbourhood Development ND Zone (majority of the subject property), Residential 1 R1 Zone (area of the site fronting on Ridge Road N), Open Space (southwest corner of the site) and Environmental Conservation Overlay, in accordance with the Comprehensive Zoning By-law 129-90.

The proposed Zoning By-law amendment is required for the following:

- Change the zoning of the portion of the site where the single-detached dwelling is proposed to Residential R2A Zone;
- Change the zoning of the portion of the site where the semi-detached dwellings are proposed to R3 Zone;
- Change the zoning for the apartment block to RM2 Zone to permit the apartment use with a maximum height of 4 storeys and site-specific regulations for a reduction to the minimum lot area (per unit), minimum side yard, minimum rear yard and minimum exterior side yard. Details of these changes are included in the table below.
- Change the zoning of the portion of the property adjacent to the wetland to Environmental Protection.

Changes to RM2 Zone

Provision (Section 15.3)	Requirement	Proposal
Minimum lot area	115 sq.m per unit	82 sq.m per unit
Minimum Interior side yard	6m	4m (northwest corner)
Minimum rear yard	One-half of the building height or 7.5m whichever is the greater	4 m
Exterior side yard	One-half of the building height or 6m whichever is the greater	6m

1. The lot area per unit is being calculated based on the total number of units and the lot area of Block 5 (**Appendix "5"**). The reduction in minimum lot area is requested to accommodate higher residential density. The request to reduce the minimum lot area per unit can be supported as the proposed development can be adequately serviced by the proposed infrastructure. Further, the future residents will have access to sufficient outdoor amenity space both by open-air balconies and future neighbourhood park located across the street.

2. The reduction in the interior side yard is only requested for the north-west corner of the proposed building. The intent of interior side yard provision is to provide adequate separation between two abutting properties and to ensure there is no adverse impact on the privacy of the residents. A reduction in the interior side yard setback can be supported as the proposed building will abut an

Environmental Protection Area outlined in Royal Ridge Phase 1 and the reduced setback will have no impact on the privacy of the future residents of the proposed apartment building. Further, a 4 m setback is adequate for future maintenance of the proposed building.

3. The reduction in the rear yard can be supported as the requested reduction will have no impact on the privacy of the future residents as the proposed building will be adjacent to EPA zone.

4. The 6 m exterior yard side setback is adequate to provide a buffer between the proposed building and the future street.

The draft Zoning By-law Amendment is included as **Appendix "5".**

Studies

Environmental Impact Study

The applicant has submitted a Scoped Environment Impact Study Addendum for the proposed residential development. The report provides a characterization of the natural features on the subject property and within the local context, tailored to the southern Phase II lands.

The EIS provides an analysis of direct, indirect and induced impacts. The site consists of cultural meadow, Scots Pine plantation and lowland White Elm forest which was designated Environmental Conservation in the Town's Official Plan. According to the EIS, the woodland is not recommended to be considered significant due to its disturbed nature, low quality species assemblage, presence of non-native species, lack of ecological function, size and inability to meet the criteria specifically outlined in the Niagara Regional Official Plan. No Species at Risk or Special Concern plants or wildlife were found on-site or are anticipated to inhabit the site based on the history of disturbance and quality of habitats. It was found that the wetland on-site is part of the provincially significant Beaver Creek wetland complex and may be considered Category 2 habitat for Blanding's Turtle. The wetland is protected with a 30 m buffer, which includes the stormwater management pond for the Phase I lands.

The report provides mitigation measures recommended to avoid or minimize potential direct, indirect and induced impacts to natural features including the following:

- 15 m buffer from the PSW, as well as a 30 m setback from potential Blanding's Turtle habitat, resulting in a total buffer of 30 m from the PSW
- Timing window for vegetation removal to protect migratory birds and their nests (May 1-August 31)
- Implement Stormwater Management Strategy and details to be designed as provided by Quartek Group
- Sediment and Erosion Control Plan be prepared and implemented prior to any vegetation removal or construction works

- A Tree Saving Plan should be prepared if there are good quality trees which can be retained based on the development layout and where grading permits
- Educate homeowners about the benefits and responsibilities of living adjacent to natural features and encourage appropriate stewardship.

Regional Comments

Regional Environmental Planning staff were previously unable to support the Draft Plan of Subdivision as development/site alteration was proposed within the confirmed habitat of Blanding's Turtle (i.e., within 30 metres of the adjacent Provincially Significant Wetland). However, Regional staff are now supportive of the updated Draft Plan of Subdivision, prepared by KLM Planning, that shows the enlarged EPA block (Block 6) with the requested 30 metre buffer, that includes the recommended 30 metre buffer from the Blanding's Turtle Habitat identified in the Environmental Impact Study (EIS).

NPCA Comments

Niagara Peninsula Conservation Authority (NPCA) has no objection to the proposed development. The Block 6 has been included on the revised draft plan of subdivision to incorporate a 30 metre buffer to the PSW. Reviewing the EIS addendum submitted with the original submission dated June 2018, undertaken by Natural Resource Solutions Inc (NRSI), NPCA staff have no objection to the 30 metre setback provided that the area remains in a naturally vegetated state. A hydrogeological study or water balance analysis was not requested by NPCA as part of the proposed development. The stormwater from the proposed development will outlet into the approved stormwater management facility on Phase 1 lands, which outlets to the wetlands. The stormwater management facility on the Phase 1 lands include Low Impact Development (LID) measures for outletting the water.

Environmental Advisory Committee (EAC) Comments

The EIS report has also been circulated to EAC for comments. The comments from EAC and Staff responses are outlined below:

1. EAC raised concerns regarding the bird survey completed as part of the EIS. Concerns were especially raised regarding a Common Nighthawk (species at risk (SAR)) call survey.

Response The applicant's ecologist (NRSI) responded to EAC comments and mentioned that since a second breeding bird survey could not be completed for the EIS Addendum within the 2017 season, NRSI adopted an approach to include all previous breeding bird observations that were included from the original EIS, as well as from incidental observations from all site visits. Therefore, a total of 4 other site visits contributed to the bird list of the EIS Addendum. In addition, NRSI considered whether any SAR birds were documented during the background review and the SAR

screening confirmed that no suitable habitat is present for any SAR birds known within the study area. Therefore, it was the opinion of NRSI that the second breeding bird survey would not result in any further protection on the subject property. Lastly, Common Nighthawk (SAR) breeding habitat comprises of "coastal sand dunes and beaches, logged or slashburned areas of forest, woodland clearings, prairies and plains, sagebrush and grassland habitat, open forests, rock outcrops, or flat gravel rooftops" (Cornell Lab of Ornithology 2020). The EIS Addendum confirmed that none of these habitat types are present on the subject lands. As a result NRSI were able to update the SAR screening and determine that there was no need to survey for this species.

Staff discussed the response from applicant's ecologist with EAC during an informal EAC meeting on January 21, 2021. EAC members have no objection to applicant's ecologist finding. Further, EAC is satisfied that the Condition # 29 (f) requested by the Region for the Draft Plan Approval "**Appendix "7**" will ensure that the habitat for the breeding birds will be protected and EAC has no further comments.

Niagara Region Environmental Planning Staff did not identify concerns in this regard.

2. Maintenance of EC Overlay Zone over the proposed park to maintain/enhance/create a corridor between the Beaver Creek wetland complex to Shagbark Nature Trail.

Response: Staff has reviewed EAC comments and are unable to support the request to maintain EC Overlay over the park proposed at the south-west portion of the subject lands, as the EIS study does not identify natural heritage feature of any significance over the lands. Further, Schedule RTB -3 of the Ridgeway Thunder Bay Secondary Plan, does not identify an environmental corridor between the subject property and Shagbark Nature Trail. Lastly, the subject lands and Shagbark Nature Trail area are separated by two busy roads, Ridge Road North and Prospect Point Road North and providing a natural corridor over the two roads may not a feasible option. However, Schedule RTB-4 shows the pedestrian linkage between the subject lands and Shagbark Nature Trail area.

Traffic Study

Quartek Group completed a Traffic Brief in support of the proposal. The study concluded that Ridge Road North currently operates at a Level of Service "A" which is the highest level of service that a road can operate at. The study assessed the potential traffic impact of both the proposed Phase 2 Development and the Draft Approved Phase 1 and concluded that even after adding the projected increase in traffic to the projected 2023 background traffic volumes, Ridge Road North would still operate well within what can be described as Level of Service "A". Further, the operation of the new entrance, where left-turn movements into the development are predicted are considerably below and will not warrant a left-turn lane.

This study has been circulated to the Town's Development Coordinator for review and the comments received are attached in **Appendix "4".**

Financial/Staffing Implications

All costs associated with the application and the development of the property is the responsibility of the owner.

Policies Affecting Proposal

Land use policies for the subject lands are contained in the Town's Official Plan, and applicable Regional and Provincial regulations.

Comments from Relevant Departments/Community and Corporate Partners

A request for comments regarding these applications was circulated to relevant Departments/Community and Corporate Partners. Comments received to date are summarized below and are attached in full as **Appendix "4"**.

Building Services

No questions or concerns

Community Planning

Detailed comments will be provided when building elevation plans are provided at the site plan stage. Site design should ensure pedestrian connections to the park and Ridge Road North are clearly identified. Dedication of parkland is required. The Town will purchase any lands that exceed the parkland dedication requirement of 5%, at fair market value. The park will not be developed until the temporary cul-de-sac is removed. These requirements are included in the conditions of draft plan approval.

NPCA

No issues. The detailed comments are included in **Appendix "4"** and summarized in the 'Studies' section of this report.

Region

No issues. The detailed comments are included in **Appendix "4"** and summarized in the 'Studies' section of this report.

Environmental Advisory Committee

Detailed comments provided in the 'Studies' section of this report.

Public Comments

An informal public open house was held by Town Staff regarding the previous iteration of the proposal on January 22, 2019. As noted previously, two subsequent statutory Public Meetings were then held on February 19, 2019 and August 31, 2020. Comments raised by members of the public are summarized below.

Loss of Wilderness

A number of residents expressed concern with the loss of wilderness that would result from the proposed development. The Town's Official Plan and Ridgeway-Thunder Bay Secondary Plans both identify the proposed site is suitable for residential use. The Environmental Impact Study concluded that with the implementation of mitigation measures (which would be required as conditions of approval) there would be no loss of or impacts to groundwater or surface water flow patterns, changes to water quality, wildlife or significant vegetation.

A 30 metre buffer from the wetland has been incorporated into the revised proposal to account for the potential habitat of turtles.

Increase in Property Values

A number of residents cited concerns with the introduction of residential units into the neighbourhood with higher values than the dwellings currently there and the potential to increase the value of existing dwellings which would increase property taxes by extension.

While increased property taxes could occur if the development causes surrounding property values to rise, homeowners would also experience increased equity.

Traffic at Intersection with Ridge Road North

A number of residents in attendance at the public meeting expressed concern with the traffic that would be generated from the subdivision and potential sightline issues with the access to Ridge Road North located within the Draft Approved Phase 1 of the Subdivision. The intersection with Ridge Road North was reviewed extensively as part of the Draft Plan Approval process and was reviewed again as part of the process to approve the subdivision agreement for the development. Council extended the Draft Plan Approval for the Phase 1 lands, which includes the new road connection to Ridge Road North, at their January 11, 2021 meeting. This intersection has been designed to meet Town Standards and no engineering or safety issues have been identified.

Potential traffic impacts from the proposed development, as well as Phase 1 of the development, were reviewed in the Traffic Brief submitted with the application. The traffic brief concluded that Ridge Road North will continue to operate at the highest level of service following the full build-out of the subdivision and that no safety issues would result.

Proposed Building Height

Several residents expressed concern with the 7-storey height of the proposed apartment building. In their opinion, the building was too tall and did not fit into the character of the area.

The applicant has reduced the height to 4 storeys to attempt to reconcile this concern. Planning Staff have no concern with the proposed height, which is consistent with the policies of the Ridgeway-Thunder Bay Secondary Plan.

Surface Water Runoff
Multiple residents expressed concern that the development could cause potential grading and surface water issues on adjacent properties.

This will be reviewed in detail as part of detailed engineering submissions through the Subdivision Agreement and Site Plan Agreement processes. A comprehensive Stormwater Management Plan has been reviewed and approved as part of the Phase 1 development lands.

Additional Concerns raised at August 31, 2020, Public Meeting

Traffic Issues:

Some residents in attendance at the public meeting expressed concern with the traffic that would be generated from the subdivision.

The applicant has submitted an updated Traffic Brief, prepared by Quartek Group Inc., dated October 2020. The report mentions that although Ridge Road North does serve to some degree as a rural collector, it is classified by the Town as an '*urban collector road",* which is equipped to handle the traffic generated by 46 dwelling units (40 units in the apartment building and 3 semi-detached dwellings). Further, Ridge Road N will continue to operate at Level of Service 'A' in future. Lastly, the northbound traffic volume generated by the proposed development volumes is considerably below what would be required to warrant a dedicated left-turn lane.

Secondary/Emergency Access for the Site

At the meeting, concern was raised regarding whether a secondary/emergency access was required for the proposed development. The proposed development will be accessed by Street 1 which will connect with Royal Ridge Drive of Royal Ridge Phase 1.

Staff has received a follow up opinion from the applicant's traffic consultant which details that that emergency access from Ridge Road North to Royal Ridge Drive is to be provided in accordance with the approved subdivision plan for Royal Ridge Phase 1, and that this access will be only 95 metres north of the intersection of Royal Ridge Drive

and proposed Street '1' in Phase 2. Also, the furthest distance of the centre of any development block or lot frontage from the intersection of Royal Ridge Drive and the proposed Street '1' in Phase 2 is less than 90 metres. This additional information has been reviewed by the Town's Fire Department and they have confirmed that a secondary/emergency access is not required for the proposed Phase 2 development.

New Street Connection to Ridge Road North

At August 31, 2020, Public Meeting, a discussion took place as to whether the street access to Ridge Road North could be moved from its currently approved location between 619 and 633 Ridge Road North on the Phase 1 lands to a location on the Phase 2 lands between 603 and 613 Ridge Road North. Concerns were raised with respect to the grade difference between the approved road location and the dwellings adjacent to it.

The applicant has reviewed this requested change and has chosen not to modify the Plan as there is insufficient space between the existing dwellings at 603 and 613 Ridge Road North for a public road. To provide a road in this location, the dwelling at 613 Ridge Road North would have to be removed, and would also result in the loss of two to three dwellings within the Plan. Further, this would necessitate major changes to the Draft Approved Plan for Phase 1 and the proposed Plan for Phase 2. The applicant wishes to maintain their existing approvals for Phase 1 and is requesting Council to approve the proposed plan for Phase 2.

It is noted that Council discussed this issue at their January 11, 2021 meeting when considering a request to extend Draft Plan Approval to Phase 1 lands. Council defeated a motion to defer the requested extension in order for the applicant to consider this matter further. The extension of Draft Plan approval for Phase 1 was approved.

Lastly, Staff notes that the street location on the Draft Approved Plan for Phase 1 is consistent with the Ridgeway-Thunder Bay Secondary Plan, which illustrates conceptual road patterns for development.

Alternatives

Council may decide to deny this Draft Plan of Subdivision and Combined Official Plan and Zoning By-law amendment. Planning staff do not recommend this as the proposal is consistent with Provincial and Regional Policies, conforms to relevant Town Policies and represents good land use planning.

Communicating Results

There are no communication requirements at this time.

Conclusion

Planning staff recommend that Council approves the Draft Plan of Subdivision and the combined Official Plan and Zoning By-law as detailed in **Appendix "5"** and **Appendix "6"** of this report as the approval will facilitate the development of the subject property in a manner that is consistent with applicable Town, Regional and Provincial policies

Attachments

Appendix "1"- Location Plan
Appendix "2"- Site Plan
Appendix "3"- Draft Plan
Appendix "4"- Agency and Resident Comments
Appendix "5" - Official Plan Amendment
Appendix "6" - Zoning By-law Amendment
Appendix "7" - Draft Plan Conditions

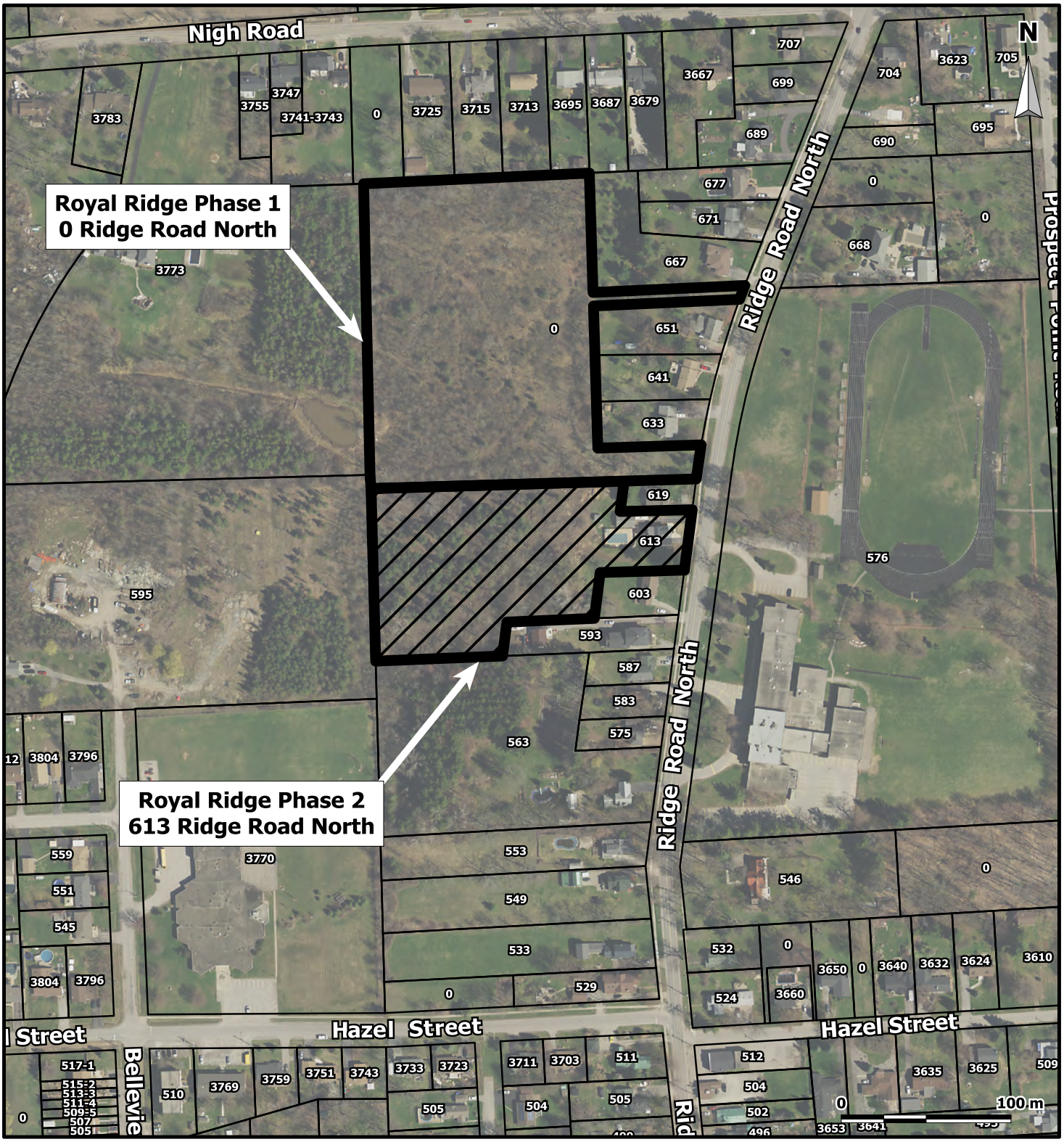

ROYAL RIDGE SUBDIVISION PHASE 2 - 613 RIDGE ROAD NORTH
Location Plan

Royal Ridge Subdivision Phase 1 | Royal Ridge Subdivision Phase 2

BERTIE CON 2 LE PT LOT 23 RP 59R7362 PART 1 RP 59R16031 PART 1 IN THE TOWN OF FORT ERIE, REGIONAL MUNICIPALITY OF NIAGARA

Planning & Development Services
Map created February 8, 2019

DRAFT PLAN OF SUBDIVISION
PART OF LOT 23, CONCESSION 2, LAKE ERIE
GEOGRAPHIC TOWNSHIP OF BERTIE
TOWN OF FORT ERIE
REGIONAL MUNICIPALITY OF NIAGARA

SCALE 1:750

DRAFT PLAN T–

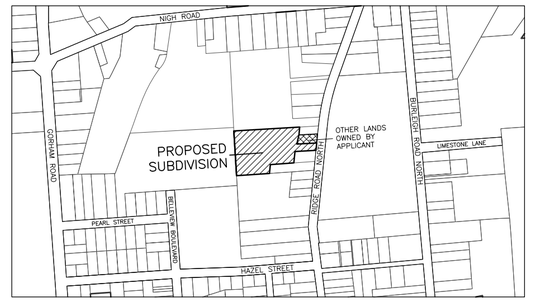

KEY PLAN N.T.S

SECTION 51, PLANNING ACT, ADDITIONAL INFORMATION

A. AS SHOWN ON DRAFT PLAN
B. AS SHOWN ON DRAFT PLAN
C. AS SHOWN ON DRAFT PLAN
D. SEE SCHEDULE OF LAND USE
E. AS SHOWN ON DRAFT PLAN
F. AS SHOWN ON DRAFT PLAN
G AS SHOWN ON DRAFT PLAN
H. MUNICIPAL PIPED WATER AVAILABLE AT TIME OF DEVELOPMENT
I. SANDY SILT / CLAY SILT
J AS SHOWN ON DRAFT PLAN
K. SANITARY AND STORM SEWERS, GARBAGE COLLECTION, FIRE PROTECTION
L. AS SHOWN ON DRAFT PLAN

SURVEYOR'S CERTIFICATE

I HEREBY CERTIFY THAT THE BOUNDARIES OF THE LAND TO BE SUBDIVIDED AS SHOWN ON THIS PLAN, AND THEIR RELATIONSHIP TO THE ADJACENT LAND ARE ACCURATELY AND CORRECTLY SHOWN.

DATE: JUNE 16, 2020

DONALD G. CHAMBERS OLS
CHAMBERS AND ASSOCIATES SURVEYING LTD.

OWNER'S CERTIFICATE

I AUTHORIZE KLM PLANNING PARTNERS INC. TO PREPARE AND SUBMIT THIS DRAFT PLAN OF SUBDIVISION TO THE TOWN OF FORT ERIE FOR APPROVAL.

OWNER

ROYAL OAK PROPERTY DEVELOPMENTS LTD.
1188 GARRISON ROAD
FORT ERIE, ONTARIO
L2A1P1

BRENT KING PRESIDENT

SCHEDULE OF LAND USE

TOTAL AREA OF LAND TO BE SUBDIVIDED = 1.351±Ha. (3.338±Acs)

	BLOCKS	LOTS	UNITS	±Ha.	±Acs.
BLOCKS FOR SEMI DETACHED DWELLINGS					
BLOCKS 1–3		3	6	0.365	0.902
MIN. LOT FRONTAGE = 26 METRES MIN. UNIT AREA = 1,200 SQUARE METRES					
LOTS FOR SINGLE DETACHED DWELLINGS					
LOT 4		1	1	0.073	0.180
MIN. UNIT FRONTAGE = 14.7 METRES MIN. UNIT AREA = 700 SQUARE METRES					
APARTMENT RESIDENTIAL					
BLOCK 5	1		40	0.329	0.813
SUBTOTAL	1	4	47	0.767	1.895
BLOCK 6 – ENVIRONMENTAL PROTECTION AREA	1			0.083	0.205
BLOCK 7 – PARK	1			0.161	0.398
BLOCK 8–10 – 0.3m RESERVE	3			0.002	0.005
STREETS 20.0m, WIDE TOTAL LENGTH= 167±m. AREA= 0.290±Ha.				0.338	0.835
TOTAL	6	4	47	1.351	3.338

NOTE – 0.3 METRE RESERVES HAVE BEEN EXAGGERATED TO 1 METRE FOR ILLUSTRATIVE PURPOSES

KLM PLANNING PARTNERS INC.
Planning • Design • Development

PROJECT No. P-3116
SCALE 1:750 JUNE 11, 2020
(3116DES5) X-REF: (3116MAS3 & 3116TOPO)
DWG. No. - 20:1

64 JARDIN DRIVE - UNIT 1B, CONCORD ONTARIO L4K 3P3
TEL: (905)669-4055 FAX: (905)669-0097 design@klmplanning.com

APPENDIX "3" TO ADMINISTRATIVE REPORT PDS-15-2021 DATED FEBRUARY 22, 2021

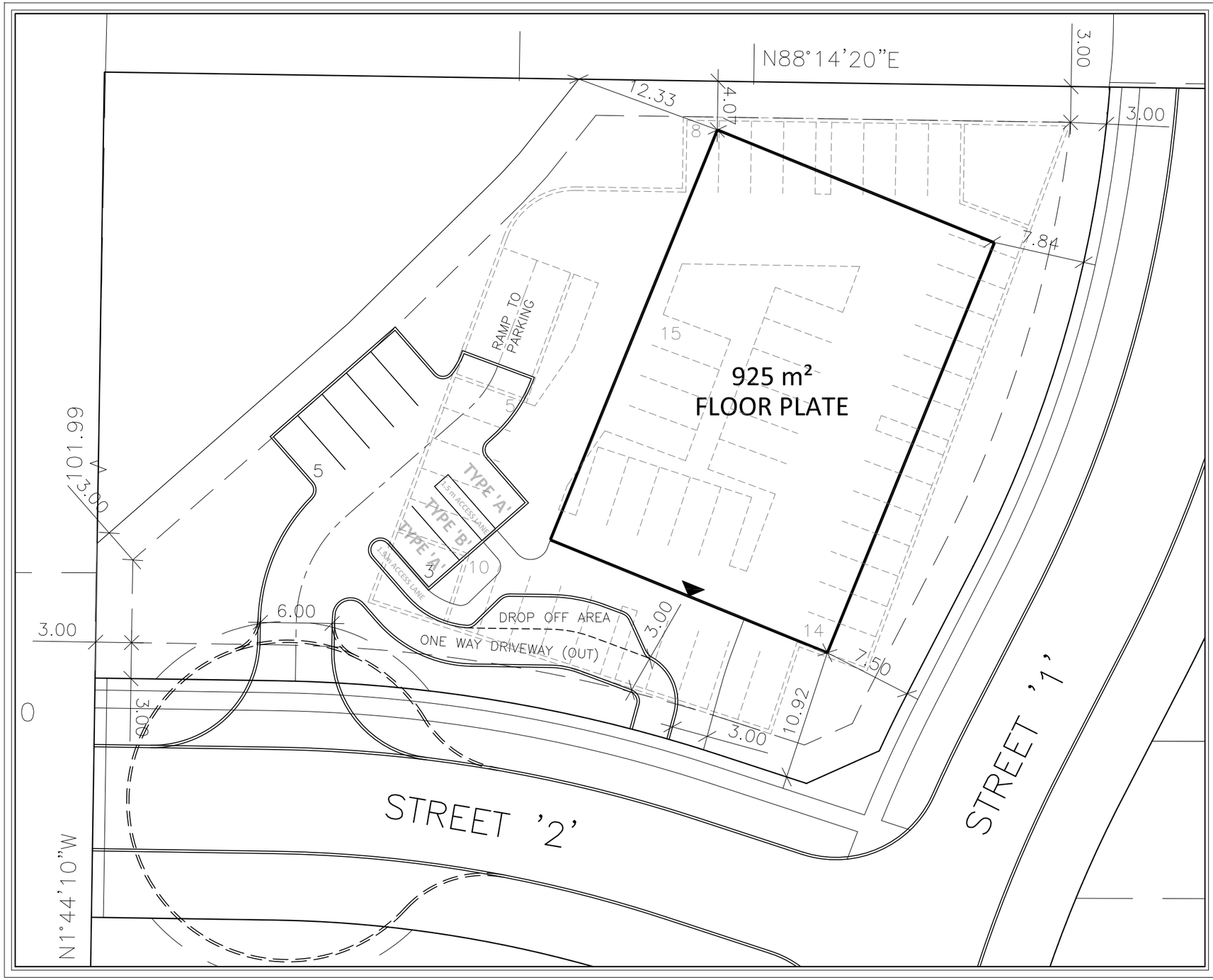

CONCEPTUAL SITE PLAN

UNITS: 40
PARKING: 60 SPACES

PROJECT No. P-3116
June 8, 2020
SCALE 1:300
DES5

KLM PLANNING PARTNERS INC.
64 JARDIN DRIVE - UNIT 1B, CONCORD ONTARIO L4K 3P3
TEL: (905) 669-4055 FAX: (905) 669-0097 design@klmplanning.com
Planning ● Design ● Development

Re: Royal Ridge Phase 2

Keegan Gennings to: Anamika Dilwaria 07/28/2020 12:13 PM

From: Keegan Gennings/FortErie
To: Anamika Dilwaria/FortErie@TownOfFortErie

Keegan Gennings

Keegan Gennings

Keegan Gennings

To: ADilwaria@forterie.ca

Hi Anamika,

I have reviewed the plan of subdivision condo application for Royal Ridge Phase 2 and I have no comments.

Regards,

Keegan Gennings C.B.C.O
Chief Building Official
Town of Fort Erie
905-871-1600 ext. 2515

Interoffice Memorandum

July 27, 2020
File Nos. 350308-112, 350302-46 & 350309-478

To: Anamika Dilwaria, Senior Development Planner
From: Signe Hansen, Manager, Community Planning
Subject: **Royal Ridge Phase 2 (613 Ridge Road North)**
Combined OPA/ZBA/Draft Plan of Subdivision Application

I have no comments relative to the application for an Official Plan Amendment and Zoning By-law Amendment for 613 Ridge Road North. Community Planning comments relative to the Draft Plan of Subdivision are provided below.

Neighbourhood Planning/Urban Design Comments
Additional staff comments can be expected when apartment building and semi-detached layout and building elevations are provided, as well as a more detailed site plan.

Building elevations are particularly important for the building fronting Ridge Road North, as it is effectively infilling on an existing streetscape with adjacent detached residential and compatibility will be of interest to staff, the public and Council. Detailed elevations closely representing the proposed buildings, including renderings will be required when the applications are advanced. Parking in the front yard of this proposed building is not desirable, but rather should be located in the rear of the site.

Active Transportation
The Town's Active Transportation Master Plan (March 2020) identifies a proposed bike lane on Ridge Road North. The Applicant will be request to contribute to the cost related to the proposed AT facility. Site design should ensure pedestrian connections to the park and Ridge Road North are clearly identified.

Site Plan and Landscape Works
A Landscape Plan will be required for the entire site, pursuant to requirements of Subdivision and Site Plan Control Guidelines. Pedestrian connections/circulation, amenity space, parking, landscaping, buffering of adjacent properties and streetscaping should all be addressed. The Landscape Plan must be prepared by a Landscape Architect.

Dedication of parkland is required. The Town will purchase any lands that exceed the parkand dedication requirement of 5%, at fair market value. The park will not be developed until the temporary cul-de-sac is removed.

A Tree Preservation Plan is required, to be performed by a Certified Arborist, for any trees larger than 100mm DBH. Requirements for a Tree Preservation Plan are outlined in the Site Plan Control Guidelines.

Regards

Signe Hansen, OALA, CSLA, MBA
Manager, Community Planning
/sh

Interoffice Memorandum

July 24, 2020
File No. 350308-0112, 350302-0046 & 350309-0478

To: Anamika Dilwaria, Senior Development Planner
From: Jeremy Korevaar, Coordinator, Development Approvals
Subject: **DRAFT PLAN OF SUBDIVISION, OFFICIAL PLAN AMENDMENT AND ZONING BY-LAW AMENDMENT APPLICATION – ROYAL RIDGE PHASE 2 – COMMENTS**

On behalf of the Infrastructure Services Department, Engineering Services Division, we have reviewed the above noted Draft Plan of Subdivision, Official Plan Amendment and Zoning By-law Amendment applications and supporting documents and have the following comments:

- We have no objections to the proposed Official Plan Amendment and Zoning By-law Amendment.
- The comments provided below apply to Streets '1' and '1', Lots 1 to 4 and Block 5 to 7 of the proposed Draft Plan of Subdivision and DO NOT APPLY TO ANY FUTURE DEVELOPMENT OF THE REMNANT PROPERTY CURRENTLY OCCUPIED BY A DWELLING UNIT KNOWN AS 613 RIDGE ROAD NORTH.
- Development of Block 2 is subject to future Pre-Consultation Meeting(s), the number of required meetings will be determined by Town staff once a development proposal is received.
- Temporary turn-around facilities shall be provided in accordance with the Town's Design Standards.
- In accordance with the Official Plan, the Developer is required to convey to the Town of Fort Erie a road widening across the Ridge Road North frontage. Ridge Road from Brunswick Avenue to Bowen Road is identified as a Collector Road with a road allowance width of 23.0m. The current road allowance width is 20.1m therefore a road widening of 1.45m will need to be conveyed to the Town.
- The Traffic Brief prepared by Quartek Group Inc. dated March 2018 has been reviewed and we have the following comments:
  - The Traffic Brief shall be prepared by a traffic consultant.
  - The report should be updated to reflect the Town's classification of the road as an urban collector road.
  - More details should be provided to justify the trip generation numbers and the traffic distribution. Given the addition of 46 units, the peak hour trip generation only results in significantly lower trips per unit (AM Peak – 21 trips and PM Peak – 24 trips) versus that Phase 1 trip generation for 39 units (AM Peak – 24 trips and PM Peak – 28 trips).
- The Functional Servicing Report prepared by Quartek Group Inc. dated November 2018 has been reviewed and we have the following comments:
  - The first paragraph of Section 3.0 says "Looping is not feasible . . ." The watermain must be looped in order for the Town to maintain the water quality standards regulated

by the Province of Ontario. A layout for efficient watermain looping has been previously provided through the Final Subdivision Approval review for Royal Ridge Phase 1.

- A watermain shall be constructed along Street 'B' and terminating at the property line with a loop for future extension.
- We agree with Quartek Group's assessment that the receiving sanitary sewer has adequate capacity to service the additional units in Phase 2.
- A detailed addendum to the Royal Ridge Phase 1 Stormwater Management Report is required to address design considerations for the addition of Phase 2 lands. The addendum shall consider design criteria for the various housing types and well impervious areas.
- A swale is required to convey overland flows along the south side of Street 'A' in the Royal Ridge Phase 1 subdivision. The proposed road extension will interrupt this flow, therefore accommodations must be made to maintain this overland flow route.

- **The proposed terminus of Street 'B' shows a proposed ground elevation that is approximately 3.0m higher than the existing ground elevation. More detail needs to be provided to justify the proposal to fill the site.**

General Comments

1. The internal lands of this development are not serviced. The developer will be responsible for all associated costs to extend required municipal services into the subject lands. Since the planned lots are within the urban area boundary, they must be serviced by the municipal sanitary sewer system and the municipal water distribution system.

2. The Owner shall retain a qualified Engineer to prepare site engineering, cost estimates and administer servicing work associated with developing the subject lands.

3. All municipal servicing is to be designed and constructed to Ontario Provincial Standards and Town Guidelines and will be subject to the approval of the Town of Fort Erie Director of Infrastructure Services.

4. Prior to installing sewer services, the Owner must obtain Environmental Compliance Approval from the Ministry of Environment, Conservation and Parks for sewer and storm water management works needed to service the proposed development. Prior to installing the watermain to service the proposed development, the Owner must submit Ministry of Environment 'Form 1' Record of Watermain to the Town.

5. The Owner must obtain approved Service Connection Permits from the Town of Fort Erie for residential connections to existing sewers or watermains.

6. A geotechnical study is required to confirm sewer pipe design, pipe bedding and backfill and to assess ground water conditions and bedrock elevations.

7. Given the small magnitude of the development proposal, phasing of the development servicing will not be permitted.

Roads Comments

1. All internal roads within this development shall be designed and constructed to a full urban cross section consistent with the Town of Fort Erie typical urban cross section standard, (PW-501 FE), (curb & gutter, storm sewer and sidewalk), Ontario Provincial Standards (OPS) and Transportation Association of Canada (TAC).

2. All proposed roadways within the plan shall be dedicated as public highways.

3. All road intersections and curves shall be designed and constructed in accordance with OPS and TAC requirements. Road allowance widths (20m minimum) must be able to accommodate all turning radii under this requirement.

4. LED Streetlights will be required as per the Town street light policy.

5. At a minimum a 1.5m wide concrete sidewalk shall be provided on one side of all streets. Cross-walks shall be limited to intersections with STOP control as much as practical.

Watermain Comments

1. Fire hydrants at the standard spacing must be provided, and hydrant layout is also subject to review and approval by the Town of Fort Erie.

Storm Drainage Comments

1. The developer of these lands must address any downstream impacts of storm water runoff from the proposed development. Downstream impacts can be mitigated with on-site storm management. Storm water management must include a means to control the release of post development storm run off to predevelopment rates for storm events (for the 5-year storm and up to and including the 100-year storm). The difference in pre and post development runoff shall be stored on site and released at a safe controlled rate. The release rate shall not create downstream flows that may increase erosion. If the receiving outlet(storm sewer, ditch or drainage course) has not been designed for the 5-year storm, then site discharge must be controlled to the site pre-development rate discharge for that outlet based on the existing design capacity of the outlet and the downstream system.

2. Storm Water Management (SWM) and the site storm drainage system is to be addressed in accordance with the Town of Fort Erie's Storm Drainage Guidelines, the Town of Fort Erie Lot Grading Policy, Town of Fort Erie Stormwater Management Facility Design, Operation and Maintenance Policy and Standards and Ministry of Environment Best Management Principles. The minor system is to be capable of accommodating the 5-year storm. The major system shall provide unencumbered flow for the major event (100-year storm) to the storm water management facility.

3. The developer must provide a SWM report for all development phases of the subject lands.

4. Rear yard catch basins (RYCB) must also be incorporated into the development drainage system. The rear yard catch basins would provide a means to ensure consistent rear yard

drainage, provide outlets for the swale system and provide access to the storm sewer system for flushing maintenance. 3.0m wide easements, in favour of the Town, would be required to allow access to the catch basins and leads for maintenance purposes. RYCB leads shall be offset from lot lines.

5. A Subdivision Grade Control Plan showing existing and proposed grades, overland flow routes and building envelope and basement floor elevations is to be submitted by the Owner for review and approval by the Town.

6. Existing overland drainage patterns must be maintained.

7. The Town will assume responsibility for the maintenance of the storm water management facility, as set out in the subdivision agreement. Since the Phase 2 lands will contribute to the storm water flows for the proposed storm water management facility, the Town will not assume the facility until final assumption of Secondary Services for Phase 2.

8. The Developer is advised that prior to registration of this plan, the owner shall obtain Ministry of the Environment Environmental Compliance Approvals to the satisfaction of the Director of Infrastructure Services, for the necessary storm sewers for this development.

In view of the comments provided above the Infrastructure Services Department – Engineering Division requires **additional information before we can support** the application for Draft Plan of Subdivision.

Additional Information Required:

- Additional information regarding fill for Street ‘B’.

If the Draft Plan is modified as a result of the above comments or comments from other agencies, the modified plan may have an effect on the above comments.
We recommend the following conditions be imposed on the Draft Plan of Subdivision (additional conditions may be requested once the additional information requested above is received and reviewed):

1. That the owner deed Block 3, as shown on the Draft Plan to the Town for parkland purposes, free and clear of any mortgages, liens and encumbrances.

2. That the owner deed to the Town a 1.45m road widening across the frontage of Ridge Road North, free and clear of any mortgages, liens and encumbrances.

3. That the owner deed any and all easements that may be required for access utility and drainage purposes be granted to the appropriate authorities and utilities.

4. That all roads within the subdivision be designed according to Town of Fort Erie Standards and the lands be conveyed to the Town of Fort Erie as public highways.

5. That the subdivision agreement include a clause requiring that each agreement of purchase and sale state that *"Roof downspouts shall discharge only to ground surface via splash pads to either side or rear yards, with no direct connection to the storm sewer or discharge directed to the driveway or roadway."*

6. That the subdivision agreement include a clause requiring that each agreement of purchase and sale state that *"Public sidewalk installation will be in accordance with the terms of the subdivision agreement and as per the approved plans on file at Town Hall."*

7. That the subdivision agreement include a clause requiring that each agreement of purchase and sale state that *"The owner (developer) shall be responsible for installing paved driveway aprons from curb to the property line or from the curb to the sidewalk."*

8. That prior to receiving Final Approval, the owner shall submit, for review and approval by the Town, a Geotechnical Study prepared by a qualified engineer, that verifies the soil bearing capacity, assesses bedrock elevations and groundwater conditions, appropriate sewer pipe design, pipe bedding, backfill and roadway designs and appropriate mitigation measures to address groundwater issues encountered.

9. That the owner prepare a detailed Subdivision Grade Control Plan showing both existing and proposed grades and the means whereby major storm flows will be accommodated across the site be submitted to the Town of Fort Erie.

10. That the owner shall enter into any agreement as required by utility companies for installation of services, including street lighting, all in accordance with the standards of the Town of Fort Erie. All utilities servicing the subdivision shall be underground. Upon installation and acceptance by the Town, streetlights and streetlight electrical supply system will be added to the Town's inventory.

11. That the streets be named to the satisfaction of the Town.

12. That the owner agrees, at a minimum, to construct 1.5 metre sidewalks on one side of all internal streets within the subdivision to the satisfaction of the Town or to the satisfaction of the Town.

13. That the design drawings for the water, sanitary sewer and storm water drainage systems, including storm water management, to service this development be submitted to the Town of Fort Erie for review and approval.

14. That prior to approval of the final plan or any on-site grading, the owner submit to the Town of Fort Erie for review and approval two copies of a detailed stormwater management plan for the subdivision and the following plans designed and sealed by a suitably qualified professional engineer in accordance with the Ministry of the Environment documents entitled "Stormwater Management Planning and Design Manual", March 2003, and "Stormwater Quality Guidelines for New Development", May 1991, and in accordance with Town of Fort Erie's Storm Drainage Guidelines, the Town of Fort Erie Lot Grading Policy,

Town of Fort Erie Stormwater Management Facility Design, Operation and Maintenance Policy and Standards:

a) Detailed lot grading and drainage plans, noting both existing and proposed grades and the means whereby overland flows will be accommodated across the site;
b) Detailed sediment and erosion control plans.

15. That the subdivision agreement between the owner and the Town of Fort Erie contain provisions whereby the owner agrees to implement the approved stormwater management plan required in accordance with Condition 14 above.

Jeremy Korevaar, C.E.T.
Coordinator, Development Approvals

cc: Tim Marotta, Manager, Engineering Division

NIAGARA PENINSULA CONSERVATION AUTHORITY

250 Thorold Road West, 3rd Floor, Welland, Ontario L3C 3W2
Telephone 905.788.3135 | Facsimile 905.788.1121 | www.npca.ca

February 28, 2019

Via Email Only

Mr. Matt Kernahan, MCIP, RPP
Senior Development Planner
Town of Fort Erie
1 Municipal Centre Drive
Fort Erie, ON, L2A 2S6

Our File: PLSUB201900031

Dear Mr. Kernahan

Re: Niagara Peninsula Conservation Authority (NPCA) Comments
Applications for Official Plan Amendment, Zoning By-law Amendment, and Draft Plan of Subdivision
Royal Ridge Phase 2
Town of Fort Erie
Agent: Sullivan Plan
File Nos.: 350309-478, 350308-0112 and 350302-7OPA46

The NPCA has received applications for Official Plan amendment (OPA), Zoning By-law amendment (ZBA), and Draft Plan of Subdivision for the above project. In support of the applications, the NPCA received an environmental impact study (EIS) addendum, prepared by Natural Resource Solutions Inc., dated June 2018 and a functional servicing report (FSR), prepared by Quartek, dated November 2018. The purpose of the applications is to establish a subdivision consisting of 47 residential units, a parkland block, environmental protection block and other blocks for infrastructure. We have reviewed the applications and offer the following comments.

NPCA Policies

The NPCA regulates watercourses, flood plains (up to the 100 year flood level), Great Lakes shorelines, hazardous land, valleylands, and wetlands under *Ontario Regulation 155/06* of the *Conservation Authorities Act*. The *NPCA Policy Document: Policies for the Administration of Ontario Regulation155/06 and the Planning Act* (NPCA policies) provides direction for managing NPCA regulated features. The subject lands contain adjacent lands to the Beaver Creek Fort Erie Wetland Complex, which is a provincially significant wetland (PSW).

The PSW was discovered to be on the abutting property to the north during the review of Phase 1 of this development (the Ministry of Natural Resources and Forestry's mapping has not been updated to show the full extent of the PSW). Block 1 has been included on the draft plan to incorporate a 15 metre buffer to the PSW. Through reviewing the EIS addendum, NPCA staff have no objection to the 15 metre setback provided that the area remains in a naturally vegetated state.

Based on the above, NPCA staff have no objections to the applications as they relate to NPCA policies, subject to rezoning the 15 metre buffer to an Environmental Protection zone category and the recommended Conditions of Draft Plan Approval.

Conditions of Draft Plan Approval

NPCA staff request the following conditions be incorporated into the Conditions of Draft Plan Approval.

1. That the 15 metre buffer to the provincially significant wetland (PSW) be zoned Environmental Protection or other similar zone category that achieves the same level of protection, to the satisfaction of the Niagara Peninsula Conservation Authority.

2. That the Developer provide limit of work/construction fencing along the southeastern boundary of Block 1 to the satisfaction of the Niagara Peninsula Conservation Authority prior to any site alteration beginning on the subject lands. There is to be no site alteration within Block 1 without approval from the Niagara Peninsula Conservation Authority.

3. That the Developer submit to the Niagara Peninsula Conservation Authority for review and approval, detailed grading and construction sediment and erosion control plans.

4. That the Developer provide 1.5 metre high chain link fencing along the southeastern boundary of Block 1 to the satisfaction of the Niagara Peninsula Conservation Authority.

5. That conditions 1 to 4 above be incorporated into the Subdivision Agreement between the Developer and the Town of Fort Erie, to the satisfaction of the Niagara Peninsula Conservation Authority. The Town of Fort Erie shall circulate the draft Subdivision Agreement to the Niagara Peninsula Conservation Authority for its review and approval.

Conclusion

At this time, NPCA staff have no objections to the applications subject to the above noted rezoning and the Conditions of Draft Plan Approval. I hope this information is helpful. Please send a copy of any staff reports to Committee/Council once they are available. If you have any questions, please let me know.

Regards,

David Deluce, MCIP, RPP
Senior Manager, Regulations and Compliance (ext. 224)

cc: Mr. Michael Sullivan, MCIP, RPP, Sullivan Plan (email only)
Ms. Elissa Quintanilla, Niagara Region (email only)
Ms. Lisa Price, NPCA (email only)

Via Email Only

July 24, 2020

File No.: D.10.01.OPA-19-002, D.18.01.ZA-19-010, D.11.01.SD-19-003

Ms. Anamika Dilwaria, M.Pl., MCIP, RPP
Senior Development Planner
Town of Fort Erie
1 Municipal Centre Drive
Fort Erie, ON L2A 2S8

Dear Ms. Dilwaria:

Re: Regional and Provincial Comments
Applications for Official Plan Amendment, Zoning By-law Amendment and Draft Plan of Subdivision
Royal Ridge Subdivision – Phase 2
Applicant: Royal Oak Property Developments Ltd. (c/o Brent King)
613 Ridge Road North
Town of Fort Erie

Regional Development Planning staff previously provided comments on the above noted applications on March 11, 2019. The applicant has submitted revised application forms, revised Draft Plan of Subdivision for Phase 2, revised draft Official Plan Amendment, a draft Zoning By-law Amendment and a conceptual site plan drawing for the proposed apartment block in response to Town, Region and agency comments received.

A Planning Justification Brief prepared by KLM Planning Partners Inc. outlines the proposed changes to the Draft Plan of Subdivision. The Brief states that the proposed land use and number of proposed residential unit remains unchanged and notes the substantive revision to the draft plan relates to the increase in area to the Environmental Protection (EP) Block. The EP Block has been increased from .023 ha to 0.093 ha in order to provide a 30-metre buffer from the wetland boundary that results in a reduction to the adjacent residential apartment block. The Brief also notes that the park block has

been revised as a result of the road alignment and that the temporary turning around easements have been shown.

The Brief states that the revised Official Plan Amendment continues to propose the same designations (Residential – Medium Density and Environmental Protection with the inclusion of site-specific policy to allow for the semi-detached residential use within the Medium Density designation similar to the Official Plan Amendment for Phase 1. The proposed revised Zoning By-law Amendment remains unchanged with the exception being to the maximum height for the apartment block, which has been reduced rom seven (7) storeys to four (4) storeys and an exception that reduces the minimum lot area per unit required. Minor zone boundaries have also been made to reflect the proposed changes to the draft plan of subdivision. The Planning Brief also provides an opinion as to further public notice under Section 34 (17) of the Planning Act.

Provincial and Regional Policies

The subject lands are located within a Settlement Area under the 2020 Provincial Policy Statement (PPS) and within the Delineated Built-Up Area under the 2019 Growth Plan for the Greater Golden Horseshoe (Growth Plan). The PPS and Growth Plan direct growth to settlement areas and encourage the efficient use of land, resources, infrastructure and public service facilities though the development of complete communities with a diverse mix of land uses that provide an appropriate range and mix of housing types.

The subject property is located within the urban boundary of the Town of Fort Erie and is designated Built-up Area in the Region Official Plan (ROP). A full range of residential, commercial and industrial uses are permitted within the Urban Area designation, subject to the availability of adequate municipal services and infrastructure. The ROP directs a significant portion of future growth to the Built-up Area through intensification and redevelopment. The ROP promotes higher density development in Urban Areas and supports growth that contributes to the overall goal of providing a sufficient supply of housing that is affordable, accessible, and suited to the needs of a variety of households and income groups in Niagara.

The proposed plan of subdivision provides for a mix of dwelling types including a single detached dwelling unit, semi-detached dwelling units and apartment units. The mix of housing options will provide options to serve a range of incomes and will count towards Fort Erie's annual residential intensification target of 15%. Generally, the proposal represents an efficient use of urban residential land and planned services and provides a mix of residential types aligning with Provincial and Regional policies.

Core Natural Heritage System

Regional Environmental Planning staff were previously unable to support the Draft Plan of Subdivision as development/site alteration was proposed within the confirmed habitat of Blanding's Turtle (i.e., within 30 metres of a Provincially Significant Wetland). Staff have reviewed the updated Draft Plan of Subdivision, prepared by KLM Planning

Partners Inc., dated June 11, 2020, and are satisfied that the EPA block now adequately reflects the recommended 30-metre buffer from Blanding's Turtle Habitat identified in the Environmental Impact Study (EIS), prepared by Natural Resource Solutions Inc., dated June 2018. Previously, Staff provided a list of the mitigation measures identified in the EIS, which have been incorporated into requested conditions and are included in Appendix 1.

Servicing

Comments remain unchanged from Regional comments dated March 11, 2019. Conditions relating to Servicing are requested in Appendix I.

Stormwater Management

The Niagara Region has reviewed the 'Functional Servicing Report – Royal Ridge Subdivision Phase 2, Town of Fort Erie' (dated November, 2018) and the associated engineering drawing set (dated November 21, 2018) all by Quartek Group Inc. The report indicates that the sanitary servicing for the development will be connected to Phase 1 services and Phase 1 services were sized to accommodate Phase 2. For any extension of municipal sanitary or storm sewers ECA will need to be obtained.

The Stormwater Management (SWM) Report (dated December 2017 by Quartek) for Royal Ridge Subdivision Phase 1 (651 Ridge Road North) with Phase 2 (613 Ridge Road North) being included in the Storm Drainage Area plan. The SWM facilities – an oil-grit separator (OGS) and a dry pond that service the entire Royal Ridge Subdivision are located in Phase 1 land. The SWM Report based on an overall 8.62 ha and a weighted imperviousness of 16.6% in sizing the OGS and designated an impervious coverage of 50% for Phase 2 development.

The Region requires a signed and stamped letter from a Professional Engineer to confirm the parameters used in sizing the SWM facilities are still appropriate for the proposed land uses in Phase 2 and if necessary, update the sizing brief and add measures to address the insufficiency. As the dry pond is sized to attenuate the 100-year flow, the Region requires the letter indicating how 100-year flow from Phase 2 will be managed prior to entering the dry pond.

Conditions relating to Stormwater Management are requested in Appendix I.

Waste Collection

Niagara Region provides curbside waste and recycling collection for developments that meet the requirements of Niagara Region's Waste Collection Policy. The subject property is eligible to receive Regional curbside waste and recycling collection provided that the owner bring the waste and recycling to the curbside on the designated pick up day, and that the following limits are not exceeded:

For the apartment

- No limit blue/grey containers;
- No limit green containers; and,
- 1 garbage containers per unit to a max of 12.

For Lots 1-3

- No limit blue/grey containers;
- No limit green containers; and,
- 1 garbage containers per property

In order to receive curbside collection in the development the proposed South end of Street “A” and west end of Street “B” will require a temporary cul-de-sac or dedicated “T” turn around until roads are extended, in accordance with the Niagara Region’s Corporate Policy for Requirements for Commencement of Collection for new and redevelopments (C3.007). Please revise the future engineering drawing to show temporary turn around.

Conditions relating to Regional waste collection is requested in Appendix I.

Regional Bicycle Network

The subject property has frontage on a roadway designated as part of the Regional Niagara Bicycling Network. If the bicycle route is currently not established and identified with signage, it is the intent of the Region to make provisions for doing so when an appropriate opportunity arises. This may involve additional pavement width, elimination of on-street parking, etc.

A condition is requested in Appendix I.

Conclusion

In conclusion, Regional staff has no objection to the proposed Official Plan Amendment, Zoning By-law Amendment or Draft Plan of Subdivision from a Provincial and Regional perspective, subject to the satisfaction of the requested conditions of approval attached in Appendix 1. Please refer to the detailed comments of this letter when preparing final plans for approval.

Should you have any questions concerning the above noted comments, or if you would like a hard copy of the comments, please do not hesitate to contact me at 905-980-6000 extension 3518. Please send notice of Council’s decision on this application.

Respectfully,

Lola Emberson, MCIP, RPP

Senior Development Planner

cc: Ms. Susan Dunsmore, P. Eng., Manager, Development Engineering, Niagara Region
Mr. Matteo Ramundo, Development Technician. Niagara Region
Mr. Adam Boudens, Senior Environmental Planner/Ecologist, Niagara Region
Mr. Aaron Butler, MCIP, RPP, Manager of Development Planning, Town of Fort Erie

Appendix I

Conditions of Draft Plan of Subdivision Approval

Royal Ridge Subdivison (Phase 2)

Town of Fort Erie

1. That the following clause be included in the condominium agreement:

   Should deeply buried archaeological remains/resources be found on the property during construction activities, the activities impacting the archaeological resources must cease immediately and notify the Archaeology Programs Unit of the Ontario Ministry of Heritage, Sport, Tourism, and Culture Industries (416-212-8886) and a licensed archaeologist is required to carry out an archaeological assessment in accordance with the Ontario Heritage Act and the Standards and Guidelines for Consultant Archaeologists.

   In the event that human remains are encountered during construction, all activities must cease immediately and local police as well as the Cemeteries Regulation unit of the Ministry of Government and Consumer Services in Toronto (416-326-8800) must be contacted. In situations, where human remains are associated with archaeological resources, Ministry of Heritage, Sport, Tourism, and Culture Industries should also be notified to ensure that the site is not subject to unlicensed alterations which would be a contravention of the Ontario Heritage Act.

2. That the owner provides a written acknowledgement to Niagara Region Planning and Development Services Department stating that draft approval of this subdivision does not include a commitment of servicing allocation by Niagara Region as servicing allocation will not be assigned until the plan is registered and that any pre-servicing will be at the sole risk and responsibility of the owner.

3. That the owner provides a written undertaking to Niagara Region Planning and Development Services Department stating that all Offers and Agreements of Purchase and Sale or Lease, which may be negotiated prior to registration of this subdivision shall contain a clause indicating that servicing allocation for the condominium will not be assigned until the plan is registered, and a similar clause be inserted in the subdivision agreement between the owner/developer and the Town.

4. That prior to approval of the final plan or any on-site grading, the owner shall submit the design drawings [with calculations] for the new sanitary and storm sewers required to service this development and obtain the necessary Ministry of the Environment Compliance Approval under the Transfer of Review Program.

5. That the owner provides a written acknowledgement (stamped and signed) from their engineer that the existing facility (Phase 1) will accommodated the proposed development.

6. That the owner ensure that all streets and development blocks can provide an access in accordance with the Niagara Region's Corporate Policy and By-laws relating to the curbside collection of waste and recycling. Where a through street is not maintained, the owner/developer shall provide a revised draft plan to show an appropriate temporary turnaround to permit Regional waste collection services.

7. That the owner shall comply with Niagara Region's Corporate Policy for Waste Collection and complete the Application for Commencement of Collection prior to Regional curbside waste collection services commencing if limits cannot be meet warning clauses will be included in future agreements.

8. That the following clause be included in the subdivision agreement and inserted in all Agreements of Purchase and Sale or Lease for each dwelling unit:

   "Purchasers/Tenants are advised that this property has frontage on a roadway designated as being within the Regional Niagara Bicycling Network Plan. If the bicycle route is currently not established and identified with signage, it is the intent of the Regional Municipality of Niagara to make provisions for doing so and this may involve additional pavement width, elimination of on-street parking, etc., if required on this street section."

9. That the subdivision agreement contain wording wherein the owner agrees to implement the following mitigation measures as described in the Environmental Impact Study (EIS) prepared by Natural Resource Solutions Inc., dated June 2018, including but not limited to:
   a) That sediment control and limit of work fencing be shown on the Grading Plan along the boundary of the EPA Block to the satisfaction of the Niagara Region, and that no grading occur beyond this point. Limit of work fencing must be maintained in good condition for the duration of construction until all disturbed surfaces have been stabilized. Muddy water shall not be allowed to leave the site.
   b) That a Landscape Plan be prepared for review and approval by the Niagara Region. The Landscape Plan should incorporate dense plantings of native trees and shrubs within the wetland/Blanding's Turtle habitat buffer, including thorny species to discourage human intrusion into sensitive areas.
   c) That 1.5-metre high chain link fencing be provided along the boundary of the EPA Block. Staff also recommend implementation of a no-gate bylaw to reduce human encroachment and limit the movement of pets into the adjacent natural areas.
   d) That the street lighting plan include a note indicating that bird-friendly downward projecting lighting structures will be used to ensure minimization of spill light into adjacent natural areas.
   e) That tree and vegetation removal be minimized where possible and where grading permits.
   f) Any required vegetation removal should be conducted in a manner to avoid impacts to nesting birds that may be utilizing habitats on the property. The breeding bird period for this area is generally March 15 to August 31. A

survey for active bird nests should be conducted prior to any vegetation removal or site alteration planned to occur during this window. Any site alteration works should be phased to avoid impacts to active nests until the nestlings have fully fledged.

g) Any stockpiled materials be stored and stabilized away from the trees to be retained.
h) Best practices for limiting dust should be employed. Construction activity should be limited on a daily basis to daytime hours.
i) That the conditions identified above be incorporated into a subdivision agreement between the developer and the Town of Fort Erie to the satisfaction of Niagara Region. The Town of Fort Erie shall circulate the draft plan of subdivision agreement to the Niagara Region for its review and approval.

Notes

1. Prior to granting final plan approval, the Town must be in receipt of written confirmation that the requirements of each condition have been met and all fees have been paid to the satisfaction of the Niagara Region.

2. Prior to final approval for registration, a copy of the executed condominium agreement for the proposed development should be submitted to the Niagara Region for verification that the appropriate clauses pertaining to any of these conditions have been included. The Niagara Region recommends that a copy of the draft agreement also be provided in order to allow for the incorporation of any necessary revision prior to execution.

3. In order to request clearance of the above noted Regional conditions, a letter outlining how the conditions have been satisfied, together with all studies and reports (two hard copies and a PDF digital copy), the applicable review fee, and the draft subdivision agreement shall be submitted to the Niagara Region by the applicant as one complete package, or circulated to the Niagara Region by the Town of Fort Erie

Appendix II, Waste Collection Templates

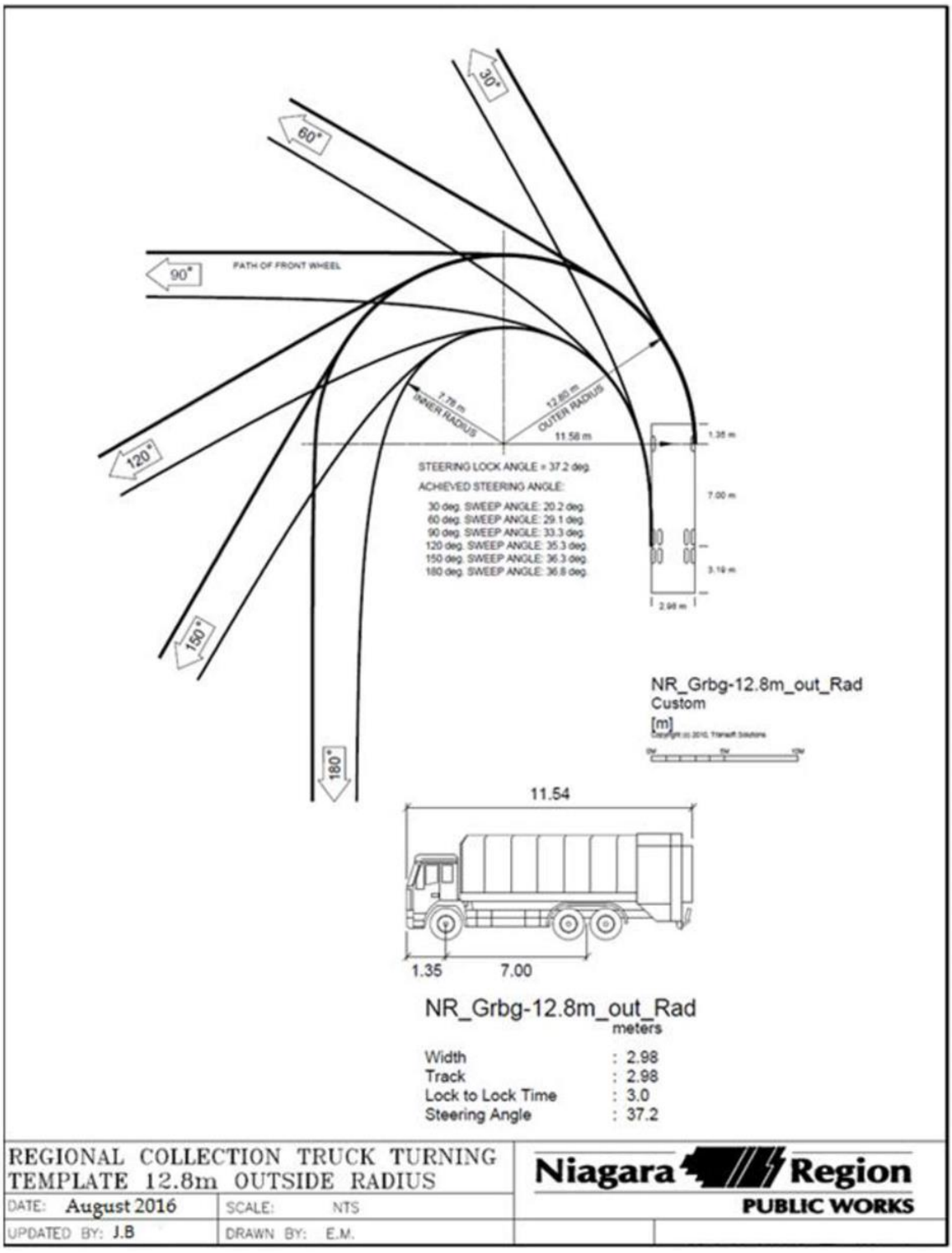

Royal Ridge Phase 2 - Draft Plan of Subdivision - Zoning By-Law Amendment

dan and laurie doherty to: adilwaria@forterie.ca 08/15/2020 11:25 AM

From: "dan and laurie doherty" <danandlauriedoherty@yahoo.ca>
To: "adilwaria@forterie.ca" <adilwaria@forterie.ca>

dan and laurie doherty

Good Morning.

I have reviewed the application notice published August 5, 2020.

I just wanted to add my support in particularly as the amendment includes a 40 unit purpose built apartment building. As a senior commercial lender specializing in development/build of residential and commercial projects for a major financial institution, this proposal addresses a market need which an older demographic that is a growing portion of the Town's population, will great need for.

I sincerely hope (and support) that this proposed amendment receives the municipality's support and approval.

Thank you

Dan Doherty
3307 Riselay Ave.,
Ridgeway, On
L0S 1N0

The Municipal Corporation of the Town of Fort Erie

By-law No. XX-2021

Being A By-Law To Enact an Amendment to the Official Plan Adopted by By-law No. 150-06 for the Town of Fort Erie Planning Area

Amendment No. 50
Royal Ridge Phase 2 Subdivision (613 Ridge Road North)
Town of Fort Erie

350302-0046

The Municipal Council of The Corporation of the Town of Fort Erie in accordance with the provisions of Section 17 of the *Planning Act,* R.S.O 1990 enacts as follows:

1. **That** amendment No.50 to the Official Plan for the Town of Fort Erie consisting of the attached explanatory text is adopted and approved.

2. **That** this by-law shall come into force and take effect on the day of the final passing thereof.

3. **That** the Clerk of the Town is authorized to effect any minor modifications, corrections or omissions, solely of an administrative, numerical, grammatical, semantical or descriptive nature to this by-law or its schedules after the passage of this by-law.

Read a first, second and third time and finally passed this XX^{h} day of XXXX, 2021

Mayor

Clerk

I, Carol Schofield, Clerk, of The Corporation of the Town of Fort Erie certifies the foregoing to be a true copy of By-law No.68-2020 of the said Town. Given under my hand and the seal of the said Corporation, this day of , 20

AMENDMENT NO. 50

TO THE

OFFICIAL PLAN

FOR THE

CORPORATION OF THE TOWN OF FORT ERIE

CONTENTS

PART "A" - THE PREAMBLE

Section 1 - Title and Components

Section 2 - Purpose of Amendment

Section 3 - Location of this Amendment

Section 4 - Basis of this Amendment

Section 5 - Implementation and Interpretation

PART "B" - THE AMENDMENT

Introductory Statement

Details of the Amendment

Schedule "A" - Land Use Plan

PART "C" - THE APPENDICES

Appendix 1 - Notice of Public Information Processes

Appendix 2 - Public Meeting Minutes

Appendix 3 - Circulation Comments

PART "A" - THE PREAMBLE

SECTION 1

TITLE AND COMPONENTS

This document, when approved in accordance with Sections 17 and 21 of The *Planning Act*, 1990, shall be known as Amendment No. 48 to the Official Plan adopted by By-law No. 150-06 of the Fort Erie Planning Area.

Part "A", the Preamble does not constitute part of this amendment.

Part "B", the Amendment, consisting of the following text and map (designated Schedule "A") constitutes Amendment No. 50 to the Official Plan adopted by By-law No. 150-06 for the Fort Erie Planning Area.

Also attached is Part "C", the Appendices, which do not constitute part of this amendment. These Appendices (1 through 3 inclusive) contain the background data, planning considerations and public involvement associated with this amendment.

SECTION 2

PURPOSE OF THIS AMENDMENT

The purpose of this Amendment is to change the land use designation of certain lands shown on Schedule A attached hereto from "Residential – Low Density", and "Environmental Conservation" to "Medium Density Special Policy Area XX" to permit an apartment building with a maximum density of 122 units/hectare and include semi-detached dwellings, and "Environmental Protection" to permit the protection of the natural heritage feature.

SECTION 3

LOCATION OF THIS AMENDMENT

The lands, which are the subject of this amendment, are located on the west side of Ridge Road North, north of Hazel Street and south of Nigh Road, as shown on Schedule "A" attached hereto.

SECTION 4

BASIS OF THIS AMENDMENT

Subsection 13.7(III) of the Official Plan adopted by By-law No. 150-06 of the Fort Erie planning area provides that amendments may be made to the Official Plan. Policies in Subsection 13.7(III) have been considered in the preparation of this amendment and the following factors have been reviewed in supporting this amendment to the Official Plan:

a) The need for the proposed use:

This amendment for “Special Policy Area XX” will permit an apartment building with a maximum density of 122 units/hectare and include semi-detached dwellings in “Residential- Medium Density” designation whereas the current “Residential – Medium Density” designation permits townhouse and low-rise apartment dwellings only, at a maximum density of 25 units/hectare.

The Ridgeway- Thunder Bay Secondary encourages higher residential densities to minimize land consumption and where existing and proposed infrastructure can support the proposed development. The need for semi-detached dwellings is substantiated by the general objectives of the Ridgeway-Thunder Bay Secondary Plan which requires the Town to provide for a variety of housing alternatives at key locations throughout the neighbourhood with particular focus on intensification.

There is a need for the Environmental Protection designation to protect the Provincially Significant Wetland and buffer area from development.

b) The extent to which the existing areas in the proposed categories are developed, and the nature and adequacy of such existing development:

Land uses in this area of the Ridgeway-Thunder Bay Neighbourhood are predominantly single detached dwellings. The addition of semi-detached dwellings to the housing stock in Ridgeway-Thunder Bay is desirable from a Provincial, Regional and Town Planning perspective.

c) The physical suitability of the land for such proposed use, and in the case of lands exhibiting or abutting a Natural Heritage feature, demonstration of compliance with the Natural Heritage policies of this plan:

The subject site slopes to the south and west. The soil conditions and relief of the site are suitable for residential development.

An Environmental Impact Study was completed as part of the planning application process. The Environmental Impact Study concluded that there would be no adverse impact to Natural Heritage Features provided a 30 metre buffer is provided. The recommended 30 metre buffer is included in Draft Plan Approval. The Niagara Peninsula Conservation Authority have confirmed that there will be no impact to Natural Heritage Features located on the subject site provided a restrictive Official Plan designation and zoning are applied to the Provincially Significant Wetland and 30m buffer area. The application of the Environmental Protection designation to these lands proposed through this amendment and the associated Zoning By-law Amendment will satisfy this condition.

d) The location of the area under consideration with respect to:

(i) the adequacy of the existing and proposed highway system in relation to the development of such proposed areas,

(ii) the convenience and accessibility of the site for vehicular and pedestrian traffic and the traffic safety in relation thereto, and

(iii) the adequacy of the potable water supply, sewage disposal facilities, and other municipal services in view of the policies contained in this Plan and in accordance with technical reports or recommendations of the Ministry of the Environment and the Regional Niagara Health Services Department and any other appropriate authority deemed advisable;

The subject site is located on Ridge Road North which is a municipal road. Access to the proposed development will be from a new municipal road that will be constructed as part of Royal Ridge Phase 1 and will connect to Ridge Road North. The new municipal road will be constructed to a full urban cross-section that meets Town of Fort Erie standards. Ridge Road North provides adequate and convenient vehicular access to the site.

The subject lands can be serviced through the extension of municipal water and sewage disposal from Royal Ridge Phase 1, located north of the subject lands.

e) The compatibility of the proposed use with uses in adjoining areas:

The subject site is appropriately located within a residential setting. The area is predominately residential. The proposed development will be compatible will the surrounding land uses. An apartment with a maximum building height of 4 storeys will have no adverse impact on the existing low-density uses.

f) The effects of such proposed use on the surrounding area in respect of the minimizing of any possible depreciating or deteriorating effect upon adjoining properties:

There is no evidence to suggest that the redesignation of the subject property to permit higher density and including semi-detached dwellings will depreciate adjoining properties. There will be no change in land use on the area where the Environmental Protection designation is proposed.

g) The potential effect of the proposed use on the financial position of the Municipality:

The proposed redesignation of the subject property will not affect the financial position of the municipality.

h) The potential effect of the proposed use in relation to the intent and implementing regulations of the Environmental Protection Act.

None.

SECTION 5

IMPLEMENTATION AND INTERPRETATION

The relevant policies of the Official Plan adopted by By-law No. 150-06 of the Fort Erie planning area shall apply to the implementation and interpretation of this Amendment.

PART "B" - THE AMENDMENT

All of this part of the document entitled "Part "B" - "The Amendment" consisting of the following policies and attached maps designated as Schedule "A" (Land Use Plan) constitute Amendment No. 50 to the Official Plan adopted by By-law No. 150-06 for the Fort Erie Planning Area. The Official Plan adopted by By-law No. 150-06 for the Fort Erie Planning Area is hereby amended as follows:

1. The subject lands described as Part 1 on the attached Schedule A are hereby redesignated from "Residential – Low Density" and "Environmental Conservation" to "Residential – Medium Density" and to "Site Specific Policy Area XX.". These lands may only be used for an apartment building with a maximum density of 122 units per net hectare and semi-detached dwellings.

2. The subject lands described as Part 2 on the attached Schedule A are hereby redesignated from " Residential- Low Density" and "Environmental Conservation " to "Environmental Protection".

PART “C” - THE APPENDICES

Appendix 1	-	Notice of Public Meeting
Appendix 2	-	Public Meeting Minutes
Appendix 3	-	Circulation comments

The Municipal Corporation of the Town of Fort Erie

By-law No. XX-2016

Being a By-law to Amend Zoning By-law No. 129-90 Royal Ridge Phase 2 Subdivision (613 Ridge Road North) Royal Oak Property Developments Ltd. (Brent King) - Owner

350309-0478

Whereas an application was received from Royal Oak Property Developments Ltd. (Brent King) to amend the Town's Comprehensive Zoning By-law No. 129-90, as amended, for the lands described as Geographic Township of Bertie Concession 2, Part of Lot 23, Registered Plan, 59R7362 Part 1and Registered Plan 59R16031, Part 1, Town of Fort Erie, Regional Municipality of Niagara, and

Whereas Public Meetings pursuant to Section 34(12) of the *Planning Act*, R.S.O. 1990, c.P.13 were held on February 19, 2020 and August 13, 2020 and

Whereas it is deemed desirable to amend the Comprehensive Zoning By-law No. 129-90 as amended, pursuant to Report No. PDS-15-2021 considered at the Regular Council meeting of February 22, 2021 and subsequently authorized and approved by Council;

Now therefore the Municipal Council of The Corporation of the Town of Fort Erie enacts as follows:

1. **That** Schedule "A" of By-law No. 129-90 as amended, is further amended by changing the zoning of the lands as described above and shown on the attached Appendix "1" from "Neighbourhood Development (ND) Zone", "Open Space (OS) Zone" and "Residential 1 (R1) Zone" to "Residential Multiple 2 (RM2-654) Zone" (Part 1), "Residential 3 (R3) Zone" (Part 2), "Residential 2A(R2A) Zone" (Part 3), "Open Space (OS) Zone" (Part 4) and Environmental Protection (EP) Zone (Part 5)

2. **That** By-law No.129-90 as amended, is further amended by adding to "Section 15 Residential Multiple 2 (RM2) Zone" Subsection – "Exceptions to the Residential Multiple 2 (RM2) Zone" the following exceptions:

"RM2- 654 (XXX-2021) Royal Ridge Phase 2 Subdivision

These lands are zoned "Residential Multiple 2 (RM2-654) Zone", and all of the provisions of By-law No. 129-90 as amended that relate to lands zoned "Residential Multiple 2 (RM2) Zone" by this by-law shall apply to those lands zoned "Residential Multiple 2(RM2-654) Zone", on the attached Appendix "1" and shall be subject to the following provisions:

a) Notwithstanding the list of Permitted Uses in Section 15.2, the lands shown on Appendix "1" may only be used for the following:
   - Apartment dwellings

b) Notwithstanding the zone Regulations for Apartment dwellings in Section 15.3, shall be subject to the following provisions:

i) Minimum lot area - 82 sq.m per unit
ii) Maximum height – 4 storeys
iii) Minimum side yard – 4 m at the northwest corner
iv) Minimum exterior side yard – 6 m
v) Minimum rear yard – 4 m

3. **That** the Clerk of the Town is authorized to effect any minor modifications, corrections or omissions solely of an administrative, numerical, grammatical, semantical or descriptive nature to this by-law or its schedules after the passage of this by-law.

Read a first, second and third time and finally passed this XX day of XXXX, 2021.

_____
Mayor

_____
Clerk

I, Carol Schofield, Clerk, of The Corporation of the Town of Fort Erie certifies the foregoing to be a true copy of By-law No.xx-2020 of the said Town. Given under my hand and the seal of the said Corporation, this day of , 20

_____

CONDITIONS OF DRAFT PLAN APPROVAL
Royal Ridge Phase 2 Subdivision
(December 14, 2020)

The conditions of final approval and registration of the Royal Ridge Phase 2 Subdivision by Royal Oak Property Developments File No. 350302-0112, Town of Fort Erie are as follows:

1. That this approval applies to Royal Ridge, Phase 2 Subdivision, located on the west side of Ridge Road North, Geographic Township of Bertie Concession 2, Part of Lot 23, Registered Plan, 59R7362 Part 1and Registered Plan 59R16031, Part 1, Town of Fort Erie, prepared by KLM Planning Partners, dated June 11, 2020, 1 block for a 4 storey 40 unit apartment building, 1 block for environmental protection area, 1 block for a park, 3 lots for semi-detached dwelling and 1 lot for a single detached dwelling.

2. That the Developer dedicate 0.067 hectares of land, shown as a portion of Block 7 on the Draft Plan to the Town for parkland purposes, free and clear of any mortgages, liens and encumbrances.

3. That the Developer agrees to convey 0.093 hectares of lands, shown as a portion of Block 7 on the Draft Plan for parkland purposes to the Town for the agreed upon fair market, to be determined, free and clear of any mortgages, liens and encumbrances. .

    a) The fair market value of the land shall be determined by a certified appraiser to be retained by the Town.

4. That the Developer deed to the Town a 1.45m road widening across the frontage of Ridge Road North, free and clear of any mortgages, liens and encumbrances.

5. The Developer deed any and all easements that may be required for access utility and drainage purposes be granted to the appropriate authorities and utilities.

6. That all roads within the subdivision be designed according to Town of Fort Erie Standards and the lands be conveyed to the Town of Fort Erie as public highways.

7. That the subdivision agreement include a clause requiring that each agreement of purchase and sale state that *"Roof downspouts shall discharge only to ground surface via splash pads to either side or rear yards, with no direct connection to the storm sewer or discharge directed to the driveway or roadway."*

8. That the subdivision agreement include a clause requiring that each agreement of purchase and sale state that *"Public sidewalk installation will be in accordance with the terms of the subdivision agreement and as per the approved plans on file at Town Hall."*

9. That the subdivision agreement include a clause requiring that each agreement of purchase and sale state that *"The Developer shall be responsible for installing paved driveway aprons from curb to the property line or from the curb to the sidewalk."*

10. That prior to receiving Final Approval, the Developer shall submit, for review and approval by the Town, a Geotechnical Study prepared by a qualified engineer, that verifies the soil bearing capacity, assesses bedrock elevations and groundwater conditions, appropriate sewer pipe design, pipe bedding, backfill and roadway designs and appropriate mitigation measures to address groundwater issues encountered. Developer to provide three copies of the final study, once approved by the Town.

11. That the Developer prepare a detailed Subdivision Grade Control Plan showing both existing and proposed grades and the means whereby major storm flows will be accommodated across the site be submitted to the Town of Fort Erie.

12. That the Developer shall enter into any agreement as required by utility companies for installation of services, including street lighting, all in accordance with the standards of the Town of Fort Erie. All utilities servicing the subdivision shall be underground. Upon installation and acceptance by the Town, streetlights and streetlight electrical supply system will be added to the Town's inventory.

13. That the streets be named to the satisfaction of the Town.

14. That the design drawings for the water, sanitary sewer and storm water drainage systems, including storm water management, to service this development be submitted to the Town of Fort Erie for review and approval.

15. That the Developer agrees, at a minimum, to construct 1.5 metre sidewalks on one side of all internal streets within the subdivision to the satisfaction of the Town or to the satisfaction of the Town.

16. That prior to the approval of the final plan or any on-site grading, the Developer submit to the Town of Fort Erie for review and approval two copies of a detailed stormwater management plan for the subdivision and the following plans designed and sealed by a suitably qualified professional engineer in accordance with the Ministry of the Environment documents entitled "Stormwater Management Planning and Design Manual", March 2003, and "Stormwater Quality Guidelines for New Development", May 1991, and in accordance with Town of Fort Erie's Storm Drainage Guidelines, the Town of Fort Erie Lot Grading Policy, Town of Fort Erie Stormwater Management Facility Design, Operation and Maintenance Policy and Standards:

a) Detailed lot grading and drainage plans, noting both existing and proposed grades and the means whereby overland flows will be accommodated across the site;
b) Detailed sediment and erosion control plans.

17. That the subdivision agreement between the Developer and the Town of Fort Erie contain provisions whereby the Developer agrees to implement the approved stormwater management plan required in accordance with Condition 16 above.

18. That a streetscape plan be submitted for review and approval, pursuant to the Town of Fort Erie Subdivision Control guidelines.

19. That prior to any site clearing, the Developer submit a Tree Preservation Plan, prepared by a Certified Arborist, for any trees larger than 100mm DBH for to the satisfaction of the Director of Planning & Development Services. The Developer shall agree in the Subdivision Agreement to implement the tree protection measures recommended in the approved Tree Preservation Plan.

20. That the following clause be included in the subdivision agreement:

"Should deeply buried archaeological remains/resources be found on the property during construction activities, all activities impacting archaeological resources must cease immediately, notify the Archaeology Programs Unit of the Ontario Ministry of Heritage, Sport, Tourism and Culture Industries(MHSTCI) (416-212-8886) and a licensed archaeologist [owner's archaeology consultant] is required to carry out an archaeological assessment in accordance with the Ontario Heritage Act and the Standards and Guidelines for Consultant Archaeologists.

In the event that human remains are encountered during construction, all activities must cease immediately and the local police as well as the Cemeteries Regulation Unit of the Ministry of Government and Consumer Services in Toronto (416-326-8800) must be contacted. In situations where human remains are associated with archaeological resources, MHSTCI should also be notified to ensure that the site is not subject to unlicensed alterations which would be a contravention of the Ontario Heritage Act."

21. That the Developer provides a written acknowledgement to Niagara Region Planning and Development Services Department stating that draft approval of this subdivision does not include a commitment of servicing allocation by Niagara Region as servicing allocation will not be assigned until the plan is registered and that any pre-servicing will be at the sole risk and responsibility of the Owner.

22. That the Developer provides a written undertaking to Niagara Region Planning and Development Services Department stating that all Offers and Agreements of Purchase and Sale or Lease, which may be negotiated prior to registration of this subdivision shall contain a clause indicating that servicing allocation for the

subdivision will not be assigned until the plan is registered, and a similar clause be inserted in the subdivision agreement between the Developer and the Town.

23. That prior to approval of the final plan or any on-site grading, the Developer shall submit the design drawings [with calculations] for the new sanitary and storm sewers required to service this development and obtain the necessary Ministry of the Environment Compliance Approval under the Transfer of Review Program.

24. That the Developer provides a written acknowledgement (stamped and signed) from their engineer that the existing stormwater facility (Phase 1) will accommodate the proposed development

25. That the Developer ensure that all streets and development blocks can provide an access in accordance with the Niagara Region's Corporate Policy and By-laws relating to the curbside collection of waste and recycling. Where a through street is not maintained, the owner/developer shall provide a revised draft plan to show an appropriate temporary turnaround to permit Regional waste collection services.

26. That the Developer shall comply with Niagara Region's Corporate Policy for Waste Collection and complete the Application for Commencement of Collection prior to Regional curbside waste collection services commencing if limits cannot be meet warning clauses will be included in future agreements.

27. That the following clause be included in the subdivision agreement and inserted in all Agreements of Purchase and Sale or Lease for Lot fronting on Ridge Road:

    "*Purchasers/Tenants are advised that this property has frontage on a roadway designated as being within the Regional Niagara Bicycling Network Plan. If the bicycle route is currently not established and identified with signage, it is the intent of the Regional Municipality of Niagara to make provisions for doing so and this may involve additional pavement width, elimination of on-street parking, etc., if required on this street section*."

28. That the subdivision agreement contain wording wherein the Developer agrees to implement the following mitigation measures as described in the Environmental Impact Study (EIS) prepared by Natural Resource Solutions Inc., dated June 2018:

    a) That sediment control and limit of work fencing be shown on the Grading Plan along the boundary of the EPA Block to the satisfaction of the Niagara Region, and that no grading occur beyond this point. Limit of work fencing must be maintained in good condition for the duration of construction until all disturbed surfaces have been stabilized. Muddy water shall not be allowed to leave the site.
    b) That a Landscape Plan be prepared for review and approval by the Niagara Region. The Landscape Plan should incorporate dense plantings of native trees and shrubs within the wetland/Blanding's Turtle habitat buffer, including thorny species to discourage human intrusion into sensitive areas.

c) That 1.5-metre high chain link fencing be provided along the boundary of the EPA Block. Staff also recommend implementation of a no-gate bylaw to reduce human encroachment and limit the movement of pets into the adjacent natural areas.
d) That the street lighting plan include a note indicating that bird-friendly downward projecting lighting structures will be used to ensure minimization of spill light into adjacent natural areas.
e) That tree and vegetation removal be minimized where possible and where grading permits.
f) Any required vegetation removal should be conducted in a manner to avoid impacts to nesting birds that may be utilizing habitats on the property. The breeding bird period for this area is generally March 15 to August 31. A survey for active bird nests should be conducted prior to any vegetation removal or site alteration planned to occur during this window. Any site alteration works should be phased to avoid impacts to active nests until the nestlings have fully fledged.
g) Any stockpiled materials be stored and stabilized away from the trees to be retained.
h) Best practices for limiting dust should be employed. Construction activity should be limited on a daily basis to daytime hours.

29. That the Developer provide limit of work/construction fencing along the southeastern boundary of Block 6 to the satisfaction of the Niagara Peninsula Conservation Authority prior to any site alteration beginning on the subject lands. There is to be no site alteration within Block 6 without approval from the Niagara Peninsula Conservation Authority.

30. That the Developer submit to the Niagara Peninsula Conservation Authority for review and approval, detailed grading and construction sediment and erosion control plans.

31. That the Developer provide 1.5 metre high chain link fencing along the southeastern boundary of Block 1 to the satisfaction of the Niagara Peninsula Conservation Authority.

32. That conditions 30 to 33 (inclusive) above be incorporated into the Subdivision Agreement between the Developer and the Town of Fort Erie, to the satisfaction of the Niagara Peninsula Conservation Authority. The Town of Fort Erie shall circulate the draft Subdivision Agreement to the Niagara Peninsula Conservation Authority for its review and approval.

33. The Developer shall indicate in the Agreement, in words satisfactory to Bell Canada, that it will grant to Bell Canada any easements that may be required, which may include a blanket easement, for communication/telecommunication infrastructure. In the event of any conflict with existing Bell Canada facilities or easements, the Developer shall be responsible for the relocation of such facilities or easements.

34. The Developer shall complete to the satisfaction of the Director of Infrastructure of the Town of Fort Erie and Canada Post:

    a) Include on all offers of purchase and sale, a statement that advises the prospective purchaser:

        i. That the home/business mail delivery will be from a designated Centralized Mail Box.
        ii. That the developers/owners be responsible for officially notifying the purchasers of the exact Centralized Mail Box locations prior to the closing of any home sales.

    b) The Developer further agrees to:

        i. Work with Canada Post to determine and provide temporary suitable Centralized Mail Box locations which may be utilized by Canada Post until the curbs, boulevards and sidewalks are in place in the remainder of the subdivision.
        ii. Install a concrete pad in accordance with the requirements of and in locations to be approved by Canada Post to facilitate the placement of Community Mail Boxes
        iii. Identify the pads above on the engineering servicing drawings. Said pads are to be poured at the time of the sidewalk and/or curb installation within each phase of the plan of subdivision.
        iv. Determine the location of all centralized mail receiving facilities in co-operation with Canada Post and to indicate the location of the centralized mail facilities on appropriate maps, information boards and plans. Maps are also to be prominently displayed in the sales office(s) showing specific Centralized Mail Facility locations.

    c) Canada Post's multi-unit policy, which requires that the owner/developer provide the centralized mail facility (front loading lockbox assembly or rear-loading mailroom [mandatory for 100 units or more]), at their own expense, will be in effect for buildings and complexes with a common lobby, common indoor or sheltered space.

35. That if final approval is not given to this plan within three years of the approval date and no extensions have been granted, draft approval shall lapse. If the Developer wishes to request an extension to the draft period, a written explanation with reasons why the extension is required, together with a resolution from the local municipality must be received by the Region prior to the lapsing date.

Clearance of Conditions

Prior to granting prior to granting approval of the final plan, the Town will require written confirmation from the following agencies that their respective conditions have been met satisfactorily:

- Niagara Region Planning & Development Department for Conditions No. 20-28 (inclusive)
- Niagara Peninsula Conservation Authority (NPCA) for Conditions No. 29-32 (inclusive)
- Bell Canada for Condition No. 33.
- Canada Post for Condition No. 34.

1. THE LANDS REQUIRED TO BE REGISTERED UNDER THE LAND TITLES ACT:
   a) Section 160(1) of the Land Titles Act which requires all new plans to be registered in the Land Titles system.
   b) Section 160(2) allows certain exceptions.

2. WATER AND SEWER SYSTEMS

   Inauguration or extension of a piped water supply, a sewage system or a storm drainage system is subject to the approval of the Ministry of the Environment, Conservation and Parks under Section 52 and 53 of the Ontario Water Resources Act, R.S.O. 1990.

3. CONVEYING

   As the land mentioned above be conveyed to the Municipal Corporation may be more easily described in the conveyance by reference to a registered plan than by “metes and bounds” be it suggested that the description be so worded and be it further suggested the Developer give to the Municipality an undertaking to deposit with the Clerk a properly executed copy of the conveyance concurrent with the registration of the plan.

4. In order to assist agencies listed above in clearing the conditions of final approval and registration of the plan, it may be useful to forward executed copies of the agreement between the Developer and the Town to these agencies. In this instance this copy should be sent to:

Lola Emberson
Senior Development Planner
Planning & Development Services
Regional Municpality of Niagara
1815 Sir Isaac Brock Way

Thorold, Ontario, L2V 4T7
Phone: 905-980-6000 ext. 3518
Toll-free Phone: 1-800-263-7215
Email: lola.emberson@niagararegion.ca

Ryan Courville
Access Network Provisioning Manager
Municipal Relations
Bell Canada
Phone: 416-570-6726
Email: planninganddevelopment@bell.ca

Andrew Carrigan
Officer, Delivery Planning
Canada Post
955 Highbury Avenue North
London, Ontario N5Y 1A3
Phone: 226-268-5914
Email: Andrew.Carrigan@Canadapost.ca

Jessica Abrahamse M.E.S.
Watershed Planner
250 Thorold Road West, 3rd Floor
Welland, On
L3C 3W2
(905) 788-3135 Ext. 235
jabrahamse@npca.ca

REVIEW OF CONDITIONS

The applicants are advised that should any of the condition appear unjustified or their resolution appear to be too onerous they are invited to bring their concerns to Council's attention. Council will consider a request to either revise or delete conditions.

5. SUBDIVISION AGREEMENT

Prior to final approval for registration, a copy of the executed Subdivision Agreement for the proposed development should be submitted to the Regional Planning and Development Department for verification that the appropriate clauses pertaining to any of these conditions of approval have been included.

6. NOTES

- Prior to granting final plan approval, the Town must be in receipt of written confirmation that the requirements of each condition have been met and all fees have been paid to the satisfaction of the Niagara Region.

- Prior to final approval for registration, a copy of the executed subdivision agreement for the proposed development should be submitted to the Niagara Region for verification that the appropriate clauses pertaining to any of these conditions have been included.
- The Niagara Region recommends that a copy of the draft agreement also be provided in order to allow for the incorporation of any necessary revision prior to execution.
- In order to request clearance of the above noted Regional conditions, a letter outlining how the conditions have been satisfied, together with all studies and reports (two hard copies and a PDF digital copy), the applicable review fee, and the draft subdivision agreement shall be submitted to the Niagara Region by the applicant as one complete package, or circulated to the Niagara Region by the Town of Fort Erie.

Planning and Development Services

Prepared for	Regular Council	**Report No.**	PDS-16-2021
Agenda Date	February 22, 2021	**File No.**	350309-0509 350302-0119

Subject

PROPOSED OFFICIAL PLAN AND ZONING BY-LAW AMENDMENT
7 CENTRAL AVENUE & 100-1 QUEEN STREET
P. LEIGH WHYTE (PLW CONSULTING) (AGENT)
COMPASS HEIGHTS DEVELOPMENT LTD (JEFFREY ANDREWS) (OWNER)
BUFFALO & FORT ERIE PEACE BRIDGE AUTHORITY (PBA) (OWNER)

Recommendation

THAT Council approves the amendments to the Town's Official Plan and Zoning By-law No. 129-90 as detailed in **Appendix "8"** and **Appendix "9"** of Report No. PDS-16-2021 for the lands known as 7 Central Avenue and a portion of 100-1 Queen Street, and further

THAT Council approves the entry into a Community Benefits Agreement pursuant to Section 37 of the *Planning Act* with Compass Heights Development Ltd., for the lands known as 7 Central Avenue and a portion of 100-1 Queen Street, upon the terms and conditions outlined in **Appendix "10"** to Report No. PDS-16-2021, and in a form satisfactory to the Town Solicitor, and further

THAT Council directs staff to prepare the necessary By-laws.

Relation to Council's 2018-2022 Corporate Strategic Plan

Priority: Managed Growth through Responsibility, Stewardship and Preservation

List of Stakeholders

PLW Consulting – P. Leigh Whyte (Agent)
Compass Heights Development. – Jeffrey Andrews (Owner)
Buffalo and Fort Erie Public Bridge Authority
Residents and Property Owners in the Town of Fort Erie

Prepared by:	Submitted by:	Approved by:
Original Signed	*Original Signed*	*Original Signed*
Anamika Dilwaria, M.Pl, MCIP, RPP Senior Development Planner	Kira Dolch, MCIP, RPP, CNU-A, Director, Planning and Development Services	Tom Kuchyt, C.E.T. Chief Administrative Officer

Purpose

This report provides background information and a staff recommendation to Council on the proposed combined Official Plan and Zoning By-law amendment application that has been submitted by P. Leigh Whyte of PLW Consulting, Agent for Compass Heights Development, owner of the subject property known as 7 Central Avenue. The applicant is in the process of purchasing the easterly portion of lands known as 100-1 Queen Street from Buffalo and Fort Erie Public Bridge Authority, which forms part of the application. The application was deemed complete on September 21, 2020. The subject lands are located on the north-west corner of Garrison Road and Central Avenue as illustrated in **Appendix "1"**.

The purpose of the application is to allow the development of the subject lands for a 12-storey mixed-use building that includes 200 dwelling units and 879.9 square metres of commercial space. The statutory Public Meeting for this proposal was held on November 2, 2020. Council received the related Report No. PDS-47-2020 for information purposes that evening.

The lands are currently designated Core Mixed Use, in part and Peace Bridge (Border Services Area), in part, in the Official Plan, within the Gateway Secondary Plan Area. Lands designated Peace Bridge are also within Site Specific Policy Area 2 of the Official Plan. The applicant is requesting an amendment to the Official Plan to re-designate the northerly portion of lands from Peace Bridge (Border Services Area) to Core Mixed-Use and add a Special Policy Area designation to the subject lands to allow an increase to the maximum residential density.

Within the Core Mixed Use designation, the Official Plan and Secondary Plan policies allow a maximum building height of 4 storeys, with additional height being permitted through a Zoning By-law Amendment where it can be demonstrated that additional height is compatible with surrounding land uses. The Secondary Plan policies enable Council to permit the additional height through the use of Section 37 of the Planning Act (i.e., bonusing). The Official Plan Amendment is not needed for the additional height.

The Core Mixed Use designation permits a maximum residential density of 75 units per hectare; however, the proposed development would have a residential density of 348.8

units per hectare. A Special Policy Area designation is requested through the proposed Official Plan Amendment to allow the increased density.

The lands are currently zoned site-specific Core Mixed Use 1 (CMU1-447), in part and Public, in part, in accordance with Zoning By-law No. 129-90, as amended by By-law No. 58-11. The applicant is requesting to rezone the lands to a site-specific Core Mixed Use 1 (CMU1) Zone to allow an increase in the maximum building height. The CMU1 Zone of the Zoning By-law does not regulate density.

A site plan illustrating the details of the proposed development is attached as **Appendix "2"**. Building elevations and renderings are attached as **Appendix "3"**. The proposed building has a 3-storey podium along Central Avenue and Garrison Road, with the upper floors stepped back in the tower. The majority of the building is eight storeys in height, with floors nine to twelve occupying only the northern-most segment of the building.

Nature of the Site

The subject lands consist of approximately 0.57 hectares of vacant land. The portion of subject lands fronting onto Garrison Road previously contained a building which has now been demolished. The northeast portion of the land includes a parking lot used by the Buffalo and Fort Erie Public Bridge Authority. The following summarizes the land uses surrounding the subject property:

North:	Peace Bridge Border Service Area
South:	Garrison Road, Royal Canadian Legion, Commercial establishments
East:	Central Avenue, Nexus Enrollment Centre, Veterans Way
West:	Knights Inn Motel and commercial establishments

Planning Context

2020 Provincial Policy Statement (PPS)

The subject lands are located within a Settlement Area of the Provincial Policy Statement (PPS). The policies direct growth to settlement areas and encourage building strong communities through the efficient use of land, resources, infrastructure and public service facilities that are planned or available. Intensification, redevelopment of underutilized lands and building of compact mixed-use developments that diversify the economic base are promoted. The proposal complies with the policies outlined in PPS.

2020 Growth Plan for the Greater Golden Horseshoe (Growth Plan)

The subject lands are located within the Delineated Built-Up Area under the Growth Plan for the Greater Golden Horseshoe (Growth Plan). The Growth Plan encourages

the development of complete communities with a diverse mix of land uses that promote economic development and competitiveness and provide a range and mix of housing types. The proposal complies with the policies outlined in the Growth Plan.

2014 Regional Official Plan (ROP)

The Regional Official Plan identifies the subject lands as Urban Area and is located within the Niagara Economic Gateway Zone. A full range of residential, commercial and industrial uses are permitted within the Urban Area designation, subject to the availability of adequate municipal services and infrastructure. The ROP promotes higher density development and efficient development in Urban Areas. The Region supports the proposed development as it encourages the redevelopment of an underutilized property within the settlement area and includes a mix of commercial and residential uses. Regional staff encourage the provision of alternative forms of housing to achieve Provincial and Regional policies and provide residential units that are affordable, accessible and suited to the needs of a variety of households and income groups. The proposal includes a broad variety of unit sizes, including one-bedroom to three-bedroom units that will appeal to a broad range of household and income groups.

Official Plan & Gateway Secondary Plan

The subject lands known as 7 Central Avenue and a portion of 100-1 Queen Street are designated Core Mixed Use, in part and Peace Bridge (Border Services Area), in part, on Schedule A of the Town's Official Plan. Lands designated Peace Bridge are also within Site Specific Policy Area 2 of the Official Plan. The applicant is requesting an amendment to the Official Plan to re-designate the northerly portion of lands from Peace Bridge (Border Services Area) to Core Mixed-Use and add a Special Policy Area designation to the subject lands to allow an increase to the maximum residential density.

Section 4.8 of the Official Plan states that the lands with a Core Mixed Use designation can be developed for a mixture of residential, commercial and institutional uses which will allow an increase in the resident population thereby strengthening live/work relationship and promoting a healthier living environment by reducing vehicular trips and promoting pedestrian activities.

Section 4.8.2 of the Official Plan directs the development within lands designated Core Mixed Use, to be developed in accordance with the Neighbourhood/Secondary Plan. The Plan also requires the developments within the Core Mixed Use area to be in accordance with the approved urban design guidelines, which are discussed further below in the report.

Schedule B of the Official Plan illustrates the subject property is within a petroleum resource area. Section 7.3 of the Official Plan requires protection of petroleum resource operations (wells) as identified by the Ministry of Natural Resources and Forestry (MNR)

by ensuring a minimum setback of 75 metres. Staff note that there are no active wells within 75 metres of the subject property as identified on MNR map data of petroleum resources.

Schedule D of the Official Plan illustrates the subject property is within a cultural heritage archaeological zone. Section 11.4 of the Official Plan allows Town and the Regional Municipality of Niagara to require an archaeological resource assessment be undertaken, to determine whether prehistoric or historic archaeological resources exist on-site and determining an appropriate course of action should these resources be found. The applicant has submitted a Stage 1-2 Archaeological Assessment for 7 Central Avenue and for the lands knowns as 100-1 Queen Street. The Stage 2 Assessment resulted in the identification of no archaeological resources, and the Licensed Archaeologist recommends no additional archaeological assessment. The proposal is therefore consistent with policies contained in Section 11.4 of the Town's Official Plan.

Policy 13.7 of the Official Plan contains criteria for Council to consider when making amendments to the Official Plan and Zoning By-law. Staff have addressed the relevant criteria in detail below:

a) The need for the proposed use:

The subject lands are designated Core Mixed-Use in the Official Plan. The Core-Mixed-Use designation allows the land to be developed for a mixture of residential and commercial uses. The applicant is proposing to re-designate the northerly portion of the property from Public to Mixed-Use designation to allow the subject lands to be developed comprehensively for the proposed mixed -use building and increase the residential density to 348.8 units per hectare.

The applicant's proposal to construct a 12-storey mixed use building which will include 879.9 square metres of commercial space and 200 dwelling units meets the intent of the Official Plan as follows:

i. The Official Plan promotes mixed-use building with apartment dwelling units above the commercial uses. The applicant is proposing majority of the commercial space on the main floor. The residential dwellings will be located on the above floors.

ii. The proposed development will be located at the intersection of two arterial roads, Garrison Road and Central Avenue. Both these roads will provide convenient vehicular access. Further, proximity to the Queen Elizabeth Highway (QEW) will also provide convenient highway access. Lastly, pedestrian infrastructure exists in the surrounding area and will be further improved by this development.

iii. The proposal aims at consolidating two parcels of lands to provide a more comprehensive development.

iv. The increased density will allow efficient use of underutilized urban land and the apartment building will provide alternative form of housing. The proposal will assist the municipality in achieving it growth targets.

b) The extent to which the existing areas in the proposed categories are developed, and the nature and adequacy of such existing development.

The southerly portion of subject lands is currently vacant, while the northerly portion contains a parking lot. The surrounding land uses are mostly commercial. The proposed residential development will help to support the existing commercial uses. Further, a mix of commercial and residential development will help in creating a complete community.

c) The physical suitability of the land for such proposed use, and in the case of lands exhibiting or abutting a Natural Heritage feature, demonstration of compliance with the Natural Heritage policies of this plan:

The subject lands are not constrained by any natural heritage features. The site itself is physically suitable for the proposed uses.

d) The location of the area under consideration with respect to:

(i) the adequacy of the existing and proposed highway system in relation to the development of such proposed areas,
(ii) the convenience and accessibility of the site for vehicular and pedestrian traffic and the traffic safety in relation thereto, and
(iii) the adequacy of the potable water supply, sewage disposal facilities, and other municipal services in view of the policies contained in this Plan and in accordance with technical reports or recommendations of the Ministry of the Environment and the Regional Niagara Health Services Department and any other appropriate authority deemed advisable;

The subject lands are located at the northwest corner of Central Avenue and Garrison Road, which are both regional roads. Further, both Central Avenue and Garrison Road are arterial roads capable of handling greater volumes of traffic. The Traffic Study submitted with the application confirms that the existing roads can handle the volume of vehicular traffic as a result of the development. Further, the site is located in close proximity to QEW and will provide convenient highway access to future residents. Pedestrian infrastructure exists in the surrounding area and will be improved by this development. Lastly, the proposed development will have access to municipal services. A Holding (H) symbol is included within the proposed Zoning By-law Amendment to

ensure that the sanitary servicing system has sufficient capacity to accommodate the proposed use.

e) The compatibility of the proposed use with uses in adjoining areas:

The majority of the surrounding lands uses are commercial with an exception of Peace Bridge Border Service Area located to the north of the subject lands. The proposed mixed-use building will be compatible with the surrounding commercial land uses. The proposed building will be located close to Garrison Road. The Official Plan policies promote buildings to be generally situated at or close to the front street line, but allow varied setbacks in order to provide interesting facade variations. Though, the proposed building will be significantly taller than the abutting building in the area, the tiered design of the building provides an aesthetically pleasing design and also minimizes adverse impact on the abutting properties. The portion of the building closer to Garrison Road will have a maximum building height of 9 storeys while the 10 and 12 storey portions will be located along the north easterly portion, which will provide an adequate setback from the abutting properties and will have minimal shadowing impact of the abutting westerly property.

f) The effects of such proposed use on the surrounding area in respect of the minimizing of any possible depreciating or deteriorating effect upon adjoining properties:

There is no evidence to suggest that the proposed mixed-use building will have a depreciating or deteriorating effect upon adjoining properties. On the contrary, the proposed development may act as a catalyst to bring new development in the area, having an overall positive effect on adjoining properties.

g) The potential effect of the proposed use on the financial position of the Municipality:

The proposed re-designation of the subject property will not negatively affect the financial position of the municipality as all the works associated with the proposed development are the responsibility of the developer. The proposed residential development will provide the municipality with an additional tax base and development charges. Through the Zoning By-law Amendment, Council may also require community benefits in the form of a Section 37 Agreement with the developer, which will have a positive effect on the financial position of the municipality.

h) The potential effect of the proposed use in relation to the intent and implementing regulations of the Environmental Protection Act.

None.

Gateway Secondary Plan

The subject lands known as 7 Central are designated as Core Mixed-Use and lands known as 100-1 Queen Street are designated Peace Bridge (Border Services Area) on the Land Use Plan of the Gateway Secondary Plan. The applicant is requesting to re-designate the northerly portion of lands from Peace Bridge (Border Services Area) to Core Mixed-Use and add a Special Policy Area designation to the subject lands to allow an increase to the maximum residential density.

Core Mixed Use designation is subject to policies outlined in Section 4.16.10. The policies encourage the consolidation of smaller properties to implement integrated and holistic development.

Section 4.16.10 c) encourages buildings fronting onto Garrison Road to maintain commercial on the main floor and residential development on the above floors. Further, Section 4.16.10 d) requires proposed buildings to be generally located closer to the street. Section 4.16.10 e) and f) outline the policies regarding the maximum building height and maximum residential density. The maximum building height in the area designated Core Mixed-Use is 4 storeys and the maximum permitted residential density is 75 units per hectare. The applicant is proposing a 12-storey mixed-use building with 200 dwelling units which would result in a residential density of 348.8 units per hectare. The proposed building has a 3-storey podium along Central Avenue and Garrison Road, with the upper floors, stepped back in the tower. The majority of the building is eight storeys in height, with floors nine to twelve occupying only the northern-most segment of the building.

Section 4.16.10 e) allows an increase in the building height by an amendment to the zoning by-law. Additionally, Council may subject the approval of the additional building height to a Section 37 Agreement (i.e., bonusing), detailed further in this section.

International Gateway Urban Design Strategy

The International Gateway Urban Design Strategy was completed in 2004 and provided direction in the policy formation of the Gateway Secondary Plan. While not forming part of the Official Plan, the Urban Design Strategy may be referenced when reviewing development applications within the Gateway Secondary Plan Area.

The subject lands are located within the Garrison Urban Corridor in Section 2.1 of the International Gateway Urban Design Strategy. The Garrison Urban Corridor is envisioned as a vibrant successful mixed-use district. The Urban Design Strategy aims at locating the buildings closer to the street edge to define Garrison Road with parking located to the rear of buildings. Ground floor uses to include shops and restaurants while the upper floors used for residential or offices. Further, the Urban Design Strategy aims to maximize ground floor coverage of the building footprint along the street, and create building heights that create a street space scaled to pedestrians

The proposed mixed-use building is located close to Garrison Road with pedestrian oriented uses like restaurant (patio) and retail stores located on the main floor, while the residential units are located on the above floors. Additionally, the parking spaces are located in a parking garage, loading and service areas are located at the rear of the building. The proposed building meets these objectives.

The 2004 Urban Design Strategy speaks to maintaining a 3-storey building height along the street edge, with a 6-storey overall height limit and 8 storeys in strategic locations. The proposal maintains the intent of creating a 3-storey street edge while incrementally stepping back upper floors from the road. The site is within a strategic area at Garrison Road and Central Avenue, representing a key opportunity to accentuate the intersection as a Gateway. Staff are supportive of the proposed height in this location. The proposed development would achieve many of the objectives of the Urban Design Strategy, including:

- Promote new buildings that create an improved image for the corridor, contain the street and accentuate gateways and intersections
- Encourage redevelopment with higher densities that support transit and provides a comfortable and attractive pedestrian environment
- Create a level of uniformity of built form adjacent to the street edge
- Provide a significant pedestrian zone along the curb edge to accommodate a continuous sidewalk and distinctive streetscape treatment

Section 37 Agreement

Bonusing is a planning tool that municipalities in Ontario have authority to use by virtue of Section 37 of the provincial *Planning Act,* which allows a municipality to grant a developer bonus height or density beyond that allowed by the municipality's zoning by-law restrictions in exchange for the provision of community benefits. Section 37 currently enables the municipality to negotiate contributions towards local community benefits for development applications that exceed a site's zoned height and density.

On September 18, 2020. O. Reg. 509/20 under the *Planning Act* came into effect regarding a Community Benefits Charges (CBC) and Strategy. The Town has two years from this date in which to put in place a CBC Strategy. The new regulation, allows the municipality to collect up to a maximum of 4% of the appraised value of the property from the developer as a CBC. Until such time as the Town's CBC Strategy is complete, Section 37(1) of the *Planning Act* continues to apply with respect to bonusing.

The Town's Official Plan (subsection 13.10.2) outlines a number of facilities, services and other matters which Council may request in exchange for increases to height and/or density of development. This includes "housing units which assist in meeting the housing targets established in the Municipal Housing Statement" among other matters. The Municipal Housing Statement, which was approved by Council in 2003, was essentially replaced by the 2019 Housing Action Strategy & 2019 Housing Needs Study.

Other development features which the Town may require of the developer, through Section 37, as detailed in the Official Plan are:

- Provide parkland dedication greater than the legislative requirement
- Improve traffic and pedestrian movement
- Provide hard servicing facilities that are more than are required to service the development
- Increased buffering or landscaping beyond the requirements set out in the Zoning By-law
- Use or re-use vacant land and buildings particularly in the urban area
- Improve the compatibility of existing land uses

To assess current and future market value of land, the Town retained Kyle Pagetto, AACI, P. App, Appraiser, Collier International Ltd to prepare an appraisal. The appraisal considered the current value of the property as well as the future hypothetical value of the property, with the proposed increase in building height in place:

- Scenario A: estimated the market value of the land if the applicant was to proceed with the maximum building height of 4 storeys as outlined in the Official Plan. The estimated value of the land in this scenario $1,565,000.00.

- Scenario B: estimated market the value of the land if the proposed amendments are approved. The estimated value of the land in this scenario is $3,770,000.00.

Staff are recommending that the developer provides a cash contribution of 4% of the appraised value of the subject land as part of the Section 37 Agreement. Based on Scenario B, 4% of the appraised value is equal to $150,800. Staff have met with the developer to discuss the findings of the appraisal and the 4% contribution. The developer is agreeable to provide a cash contribution of $150,000.00, which will be secured through the Section 37 Agreement.

To ensure that the Town receives the fair market value of the land as part of Section 37 Agreement, Staff recommends that in an event the applicant does not proceed with the construction of the proposed building within 5 years of Council approval, Staff will require an update to the appraisal to assess the new market value of the land.

Details of the community benefits which the $150,000 could fund are provided below.

Community Benefit

In staff's opinion, the funds collected as part of Section 37 Agreement must be spent within the community where the development is proposed. Based on this approach, staff would like to provide two options for the allocation of the funds collected through Section 37 Agreement for Council's consideration. Ultimately, the decision to use funds collected for Section 37 Agreement, and the nature of the Section 37 Agreement, rests with Council. The funds will be collected at the issuance of the Building Permits. This

report recommends the authorization to execute the Section 37 Agreement attached as **Appendix "10" and Appendix "11"**, with further direction needed from Council relative the Community Benefit chosen. The Section 37 Agreement would be executed following the passage of the proposed Official Plan and Zoning By-law Amendments.

Option 1:

Cash contribution towards future affordable housing initiatives **(Appendix "10")**

Staff has contacted members of the Town's Affordable Housing Committee to obtain input on this matter. The Committee was provided three options for collecting community benefits in the form of affordable housing. The options provided to the Committee were:

b. **Cash contribution to support future affordable housing initiatives**: This option involved Council collecting a cash contribution from the developer to fund future local affordable housing initiatives, as specified in the By-law passed by Council approving the increased height/density.

c. **Providing affordable housing units within the development**: This option involved Council requiring a developer to provide affordable housing units within the development (e.g., affordable units within an apartment building). A certain number of units or dwellings would be required for a specified time period, at a prescribed rent. The number of units and the time period for which they are required to remain affordable would vary based on the increased appraised value of the land, before and after the additional height/density permissions are granted.

d. Providing affordable housing units outside of the development: This option would involve Council requiring a developer to provide affordable housing units separate from the development (e.g., affordable units within a separate building on-site, affordable units off-site). A certain number of units or dwellings would be required for a specified time period, at a prescribed rent. The number of units and the time period for which they are required to remain affordable would vary based on the increased appraised value of the land, before and after the additional height/density permissions are granted

Based on discussion with the applicant, comments received from Affordable Housing Committee members, and a review of the administrative work involved in Options b) and c), it was decided that Option a) would be the most feasible option at this point in time. Under this option, the applicant would be required to contribute $150,000 towards the Town's future Community Improvement Plan for affordable housing. The Section 37 Agreement (draft attached as **Appendix "10"**) would outline a general geographical area where these specific funds could be allocated. The area proposed by Staff is

generally bound by the Niagara River to the east, Lakeshore Road to the south, Concession Road to the west and Bertie Street to the north.

Option 2:

Cash contribution towards the Gateway Entrance Feature Project (**Appendix"11")**

In October 2016, Council considered options to move forward with the Fort Erie Wayfinding Study and Fort Erie Gateway Entrance Feature Project. At that time, Council directed staff to continue the Wayfinding program but not the Gateway Entrance Feature project. The Gateway project proposed the construction of two municipal displays along the QEW at entry points to the Town; the Eastern Gateway site would be in the vicinity of Central Avenue and the QEW and the Western Gateway site would be in the vicinity of Townline Road and the QEW. The budget proposal in 2015 was in the amount of $240,000 to construct both Gateway features. If this project is funded by the Community Benefits contribution from the proposed development, Council may wish to hire a consultant to undertake a new preliminary design and public input process for design and recommendations of a feature. The Section 37 Agreement (draft attached as **Appendix "11"**). The cash contribution of $150,000 would not cover the entirety of this project.

Bird-Friendly Design Standards

In February 2020, Council approved Bird-Friendly Design Standards (BFDS) for certain types of development within the Town to reduce bird collisions into windows. The BFDS apply to commercial, multi-residential and institutional development, as well as detached dwellings in the Point Abino area which are subject to site plan control. The BFDS contains design standards with regard to site landscaping, outdoor light sources and window treatments. The proposed development will be reviewed against the Town's BFDS document at the site plan control stage.

Zoning By-law No. 129-90

The subject lands are currently zoned site-specific Core Mixed Use 1 (CMU1-447), in part and Public, in part, in accordance with Zoning By-law No. 129-90, as amended by By-law No. 58-11. The applicant is requesting to rezone the northerly portion of the subject lands from Public (P) Zone to a new site-specific Core Mixed Use 1 (CMU1) Zone. The new site-specific regulations are requested to allow an increase in the maximum building height, to address setbacks for the proposed building and to limit the site to a maximum of 200 dwelling units.

The applicant's request to rezone the subject lands to a new site-specific Core Mixed Use 1 (CMU1) Zone can be supported as it will allow the entire parcel to be developed for the proposed 12-storey mixed-use building.

The requested increase in building height can be supported for the following reasons:

1. The applicant is proposing a 12-storey building with a tiered building design. The portion of the building fronting on Garrison Road will be only 9 storeys, with the top floor being an open-air restaurant. The 12-storey portion of the building is located on the north-easterly section of the parcel and is sufficient setback from the abutting westerly property.

2. Based on the Sun-Shadow Study provided by the applicant (**Appendix "6"**) only a small north-easterly portion of the abutting property will be in shadow for a few hours in the morning. For the remaining part of the day, the property will receive the full sun.

Holding Provision

Staff is recommending including a Holding Provision (H) in the amending Zoning By-law to ensure that the sanitary sewer system has been upgraded to support the permitted uses, subject to the satisfaction of the Town of Fort Erie.

Financial/Staffing Implications

All costs associated with processing the application and the development of the property is the responsibility of the owner.

Studies

Sun-Shadow Analysis

The applicant has completed a Sun-Shadow analysis to assess the impact of the increased height on the abutting properties. Based on the information provided, a major portion of the abutting westerly property will not be in shadow for a major part of the day in all seasons. Northeast portion of the property will be in the shadow for a small time in the morning in all the seasons (**Appendix "6")**.

Archaeological Study

A Stage 1-2 Archaeological Assessment reports prepared by Detritus Consulting Ltd., dated September 5, 2019, for 7 Central Avenue and dated January 6 for the northerly portion of the property, which is currently owned by Peace Bridge Border Area was submitted with the application. The Stage 2 Assessment resulted in the identification of no archaeological resources, and the Licensed Archaeologist recommends no additional archaeological assessment.

Phase 1 & 2 Environmental Site Assessment Report

The Phase One prepared by Hallex Environmental Ltd, dated May 14, 2019, and Phase Two ESA prepared by Hallex Environmental Ltd., dated September 18, 2019,

were submitted in support of the applications. A Phase One Environmental Site Assessment (ESA) report identified three (3) on-site Potentially Contaminating Activities (PCAs) that resulted in three (3) on-site Areas of Potential Environmental Concern (APEC). The APEC included the importation of fill Material of unknown quality, parking lot and gasoline and associated products storage in fixed tanks and recommended a Phase Two ESA.

The Phase Two revealed soil exceedances to the Ministry of the Environment, Conservation and Parks (MECP) Site Condition Standards for Residential Land Use in a Non-Potable Ground Water Situation. Site remediation via excavation and off-site disposal at an MECP licensed landfill will be required to attain site soil conditions that satisfy the requirements for filing an RSC.

The applicant has submitted Phase 1 and 2, ESA for the northerly portion of the property, which is currently owned by Peace Bridge Border Area. The requirement for filing RSC can be satisfied as part of a subsequent site plan approval process or through the building permit process.

Noise Feasibility Study

A Noise Impact Study prepared by Howe Gastmeier Chapnik Limited (HGC), dated July 6, 2020, was submitted with the applications to evaluate potential noise affecting the proposed development site (residential and commercial uses) and to assess the noise impacts of the development.

The study recommends required central air conditioning systems for the building in a location, installation and sound rating that complies with NPC-300. It discusses exterior wall constructions noting that at the time of the study, building elevations were not available and further input regarding the design of exterior walls can be provided during the design development. Upgraded glazing constructions are also recommended for the building and the study recommends that when detailed floor plans and building elevations are available, the glazing should be refined based on an actual window to floor area ratios and exterior wall construction. The study also recommends warning clauses to inform future residential of traffic noise issues and the presence of the surrounding commercial uses.

The study further recommends that prior to issuance of building permits for the development a Professional Engineer, qualified to perform acoustical engineer services, review the exterior wall constructions, architectural elevations, and building elevations to ensure the building façade constructions will provide sufficient sound insulation for indoor spaces and provide any additional measures, as required. The Professional Engineer should also review the mechanical and electrical plans to ensure acceptable sound levels are compliant with Provincial, Regional and Town guidelines and by-laws. In addition, the study recommends that prior to the issuance of occupancy permits, that certification be provided ensuring noise control measures for the development have been properly installed and constructed.

Wind Study

A Pedestrian Wind Study prepared by Gradientwind, dated July 13, 2020 has been submitted with the application. The subject site is located in the area which is generally windy due to proximity to Lake Erie. The study concluded that wind conditions are generally suitable for throughout the year with an exception of few locations.

The study reviewed the wind conditions along Garrison Road, Central Avenue, rooftop patio at 9th floor and observation deck at 12th floor.

The study concludes that wind condition along Garrison Road will be favourable for pedestrian during summer months. During the remaining three months the wind conditions will be uncomfortable along the entrance of the proposed restaurant. To mitigate the access point serving the proposed restaurant on the ground floor, the design team has recessed the entrance into the building façade by approximately 2 metres. Based on the prominent winds, the swing direction of the door will be clockwise when exiting the building.

The wind conditions at the northwest corner of the subject site, immediately west of the open garage structure, are predicted to be most uncomfortable throughout the year on account of the prominent southwesterly wind. To mitigate the issue, the design team is proposing to construct a full-height solid garage door along the full length of the west elevation.

The rooftop patio at Level 9 will be suitable for a mix of standing and walking during the summer season. To increase comfort levels, the design team has decided to introduce 1.8-m tall solid wind barriers along the perimeter of the restaurant.
The applicant is proposing an observation deck at the northeast corner of the building above Level 12. Since wind conditions are expected to be windy within the rooftop area, the design team has proposed a 1.8-m tall solid perimeter windscreen, which will increase comfort conditions.

The implementation of necessary mitigation measures will occur at the site plan stage.

Traffic Impact Study

A Traffic Impact Study prepared by Paradigm, dated July 2020 has been submitted with the application. In lieu of conducting new turning movement counts, reference has been made has been made to turning movements completed by Paradigm at the study intersections (where available) on December 13, 2018. These volumes have been factored to the 2020 base year using 2% compounded per annum growth rate. This rate is consistent with the background growth rate in the Region's Transportation Impact Study Guidelines, and conservatively accounts for potential traffic growth between December 2018 and

June 2020. The study concludes the traffic generated by the proposed development will have negligible impact on the Central Avenue and Garrison Road roadways under the jurisdiction of Niagara Region.

Functional Servicing Brief

Functional Servicing Report, prepared by Robert E. Dale, dated June 30, 2020, has been submitted with the application. The report concludes that the post-development peak flow targets will be achieved by controlling discharge from the site using the storm water criteria. The Erosion and Sediment controls will be implemented during construction to prevent silt-laden runoff from leaving the site in accordance with the "Erosion & Sediment Control Guidelines for Urban Construction". Maintenance of the Stormwater management shall be completed in accordance with the requirements as set out in the report.

Town staff had requested additional information from the applicant's consultant to confirm if the existing sewage system has adequate capacity to accommodate the proposed increase in flow. Based on the information provided by the applicant's consultant, staff has determined that there are servicing issues related with the proposed development.

Replacement of Existing Sewer Pipes

The existing sanitary sewer pipes located below the lands owned by Peace Bridge Authority, shown on **Appendix "7"** will have to be replaced to accommodate the additional flow generated by the proposed development. The total length of pipes that need to be replaced is approximately 290 metres. Based on the length of pipes, the cost of the pipe replacement is approximately $320,000 plus about $30,000 for engineering-related expenses. The applicant has agreed to pay for the replacement of the pipes. A Holding provision has been included in the amending zoning by-law to ensure that development does not take place until such time as this pipe constraint has been rectified.

Upgrade to Catharine Street Pumping Station

Regional staff has confirmed that Catharine Street Sewage Pumping Station (SPS) does not have sufficient capacity to accommodate the additional peak wet weather flows generated by the proposed development. The peak wet weather flows at the Catherine SPS are significant and impact the available capacity for further development and growth. The Region is currently undertaking the Class Environment Assessment (EA) to the upgrade the capacity of the Catherine Street. Based on the timeline for design and approvals, the Regional Capital Forecast has identified the construction project for the upgrade of the Catherine Street SPS in 2024, which is subject to Regional Council budget approval.

Further, the Town of Fort Erie has been working to remove wet weather flows from the sewershed to free up capacity at the SPS. Until such time as wet weather flows to the station are reduced or the station upgrade is complete, additional flows from this site cannot be accommodated at the Catherine Street SPS.

Policies Affecting Proposal

Notice of the meeting was circulated in accordance with the *Planning Act* by placing an advertisement in the August 27, 2020 edition of the *Fort Erie Post*. In addition, all property owners within 120 metres of the subject lands were mailed a "Notice of Complete Application and Public Meeting" on September 11, 2020.

Land-use policies for the subject lands are contained in the Town's Official Plan and applicable Regional and Provincial regulations.

Comments from Relevant Departments/Community and Corporate Partners

A request for comments regarding this Official Plan and Zoning By-law amendment was originally circulated to relevant Departments/Community and Corporate Partners on September 2, 2020. Comments received to date are summarized below and are attached in full as **Appendix "4"**.

Agency Comments

Regional Municipality of Niagara (Niagara Region)

A Stage 1-2 Archaeological Assessment reports prepared by Detritus Consulting Ltd., dated September 5, 2019, for 7 Central Avenue and dated January 6 for the northerly portion of the property, which is currently owned by Peace Bridge Border Area was submitted with the application. The Stage 2 Assessment resulted in the identification of no archaeological resources, and the Licensed Archaeologist recommends no additional archaeological assessment.

The Phase One prepared by Hallex Environmental Ltd, dated May 14, 2019, and Phase Two ESA prepared by Hallex Environmental Ltd., dated September 18, 2019, were submitted in support of the applications. Additionally, Phase 1 prepared by Hallex Environmental Ltd, dated September 28, 2020, and Phase Two ESA prepared by Hallex Environmental Ltd., dated January 27, 2021, 2019, for the Peace Bridge Border Area were also submitted in support of the applications. The requirements regarding filling of the Record of Site Condition (RSC) can be dealt through the Site Plan Process or at Building Permit Stage.

The Regional staff notes that an updated Noise Study will be required with the future Site Plan application that details the recommended mitigation measures required to meet NPC-300 and Niagara Region's guidelines. Any updated recommendations, if

required, with respect to building materials, glazing, and warning clauses for traffic noise can be incorporated into the future site plan agreement to be registered on title. It is also recommended that the warning clauses be included in all agreements of purchase of sale or lease for the residential and commercial units

The Region also provided comments related to Regional infrastructure and waste collection. Detailed comments are attached to this report in **Appendix "4"**. There were no objections to the subject applications.

Staff Comments

Development Coordinator

Previous comments provided by the Development Coordinator are attached to **Appendix "4"** of Report No. PDS-47-2020. The existing sanitary sewer pipes located below the lands owned by Peace Bridge Authority, shown on **Appendix "7"** will have to be replaced to accommodate the additional flow generated by the proposed development. The total length of pipes that need to be replaced is approximately 290 metres. Based on the length of pipes, the cost of the pipe replacement is approximately $320,000 plus about $30,000 for engineering-related expenses. The applicant has agreed to pay for the replacement of the pipes. A Holding provision has been included in the amending zoning by-law to ensure that development does not take place until such time as this pipe constraint has been rectified.

Building Division

No objection.

Public Comments

An informal public open house was held on September 24, 2020, via Zoom. All property owners within 120 metres of the subject lands were notified of the informal public open house on September 10, 2020, via a notice mailed by Staff. One member of the public attended the open house meeting.

As of the writing of this report one letter (e-mail) has been submitted for the application from the Buffalo and Fort Erie Public Bridge Authority **(Appendix "5")**. The letter outlined the requirement to maintain 4.5 metre setback along the north property line and provide 15 parking spaces for lease to the Public Bridge Authority. The applicant has revised the site plan to provide the requested 4.5 metre setback along the north property line and has reserved 15 parking spaces on-site for lease to Peace Bridge Authority.

The owner of the adjacent property to the west (139 Garrison Road) attended the open house meeting and had questions regarding the impact of the proposed development

on his property and timing of construction. He expressed concerns regarding the height of the proposed development. He also mentioned that currently, he has both long- and short-time guests renting the motel rooms. He was concerned that if the construction continued for a long duration of time, it will have adverse impact on his business.

The owner of the subject lands mentioned that the proposed development is only 8 storeys on the portion of the property abutting 139 Garrison Road. The building is 12 storeys on the northern portion of the property which is sufficiently setback from 139 Garrison Road. Regarding the timing of construction, he mentioned that he understands the neighbour's concerns and will try his best to expedite the process.

The site plan drawing has been revised to provide a 4.5 metre setback along the north property line and 15 parking spaces have been assigned to the Public Bridge Authority.

Additional Concerns raised at November 2, 2020, Public Meeting

Air Quality Concerns:

At the Public Meeting, some members of Council expressed concerns regarding the air quality, as the proposed development is located near Peace Bridge commercial plaza, where the trucks are often left idling for long periods. The applicant’s agent has responded to Council’s concerns and noted that the air quality work for Peace Bridge plaza was done when the Duty-Free area was reconfigured in the mid-1990’s. Since then ultra-low-sulfur diesel fuel and new engine technologies have dramatically reduced diesel truck emissions. He has further mentioned that the proposed development is upwind from the truck routes and truck parking areas as the prevailing winds are from the southwest.

Moreover, there was more recent independent air quality work done in the United States by the Department of Environmental Conservation (DEC). The final report concludes that air quality standards were not being contravened at the Peace Bridge location and that air quality *downwind* from the Peace Bridge plaza was not significantly different than air quality at other sites near a major highway.

Lastly, the applicant has confirmed that a warning clause will be included in all future development agreements, agreements of purchase and sale and leases relating to the residential units to be developed on the property regarding the noise and emission levels due to truck traffic.

Traffic Volume:

At the public meeting some concerns were expressed regarding the collection of traffic data as the traffic counts of 2020 are not reflective on the actual traffic conditions that existed prior to COVID.

The Traffic Impact Study has referenced the turning movements data collected on December 13, 2018 at the study intersections (data previously collected by Paradigm) in lieu of conducting new turning movement counts in 2020. These volumes have been factored to the 2020 base year using 2% compounded per annum growth rate. This rate is consistent with the background growth rate in the Region's Transportation Impact Study Guidelines, and conservatively accounts for potential traffic growth between December 2018 and June 2020.

The study concludes the traffic generated by the proposed development will have negligible impact on the Central Avenue and Garrison Road roadways under the jurisdiction of Niagara Region

Alternatives

Council could choose not to approve the proposed Official Plan and Zoning By-law Amendments. This is not recommended as the proposal is consistent with Provincial and Regional Policies, conforms to relevant Town Policies and represents good land use planning.

Communicating Results

There are no communication requirements at this time.

Second Opinion Clause

Should a motion be placed before Council that does not support Planning Staff's Recommendation, Council is advised to table its decision to consider the matter further or until such time as a second planning opinion on the motion, from an independent planning consultant can be obtained. If the applicant has an opinion from an independent planning consultant then Council can consider their report as the second planning opinion. In the event, the second planning opinion, obtained by the clerk or provided by the applicant, is supported by Council, and Council makes a decision based on that second planning opinion, then the planner who has provided the second opinion shall be retained for the purpose of an Ontario Municipal Board hearing. The procedures under PLA-06 shall be followed as well.

Alternatives

Council may decide to deny this Combined Official Plan and Zoning By-law amendment. Planning staff do not recommend this as the proposal is consistent with Provincial and Regional Policies, conforms to relevant Town Policies and represents good land use planning.

It is staff's recommendation to approve Option 1 (**Appendix "10")** for Affordable Housing for Community Benefits as there is a need in the community for affordable

housing. However, If Council chooses to approve the option for Gateway Entrance Feature Project for Community Benefits, then they would have to approve **Appendix "11**" instead of **Appendix "10".**

Conclusion

The proposed Official Plan and Zoning Amendment will permit the construction of a 12-storey mixed-use building with 879 square metres of retail space and 200 dwelling units. The proposed amendments are consistent with Provincial and Regional Policy and is also compatible with the surrounding land-uses. The proposed development is approved subject to a Holding provision (H) be placed in the amending by-law related to the servicing matter related to the replacement of sanitary sewer pipes. Additionally, the Zoning By-law Amendment contains provisions for Section 37. Council will have to decide as to how the monies collected for Section 37 will be allocated.

Attachments

Appendix "1"-Location Plan
Appendix "2"-Site Plan
Appendix "3"-Building Elevations and Renderings
Appendix "4"-Agency and Staff Comments
Appendix "5"-Public Comments
Appendix "6"-Sun Shadow Study
Appendix "7"-Location of Sanitary Pipes
Appendix "8"-Official Plan Amendment
Appendix "9"-Zoning By-law Amendment
Appendix "10"-Section 37 Agreement (Cash Contribution toward Affordable Housing)
Appendix "11"- Section 37 Agreement (Cash contribution towards the Gateway Entrance Feature Project)

LOCATION MAP
Combined Official Plan & Zoning By-law Amendment

Subject Lands - 7 Central Avenue & 100 Queen Street

PLAN 9218 PT LOT 1 NP 505 OFF GARRISON IN THE TOWN OF FORT ERIE, REGIONAL MUNICIPALITY OF NIAGARA

Planning & Development Services
Map created October 20, 2020

FORT ERIE ONTARIO Our Focus: Your Future

APPENDIX "2" TO ADMINISTRATIVE REPORT PDS-16-2021 DATED FEBRUARY 22, 2021

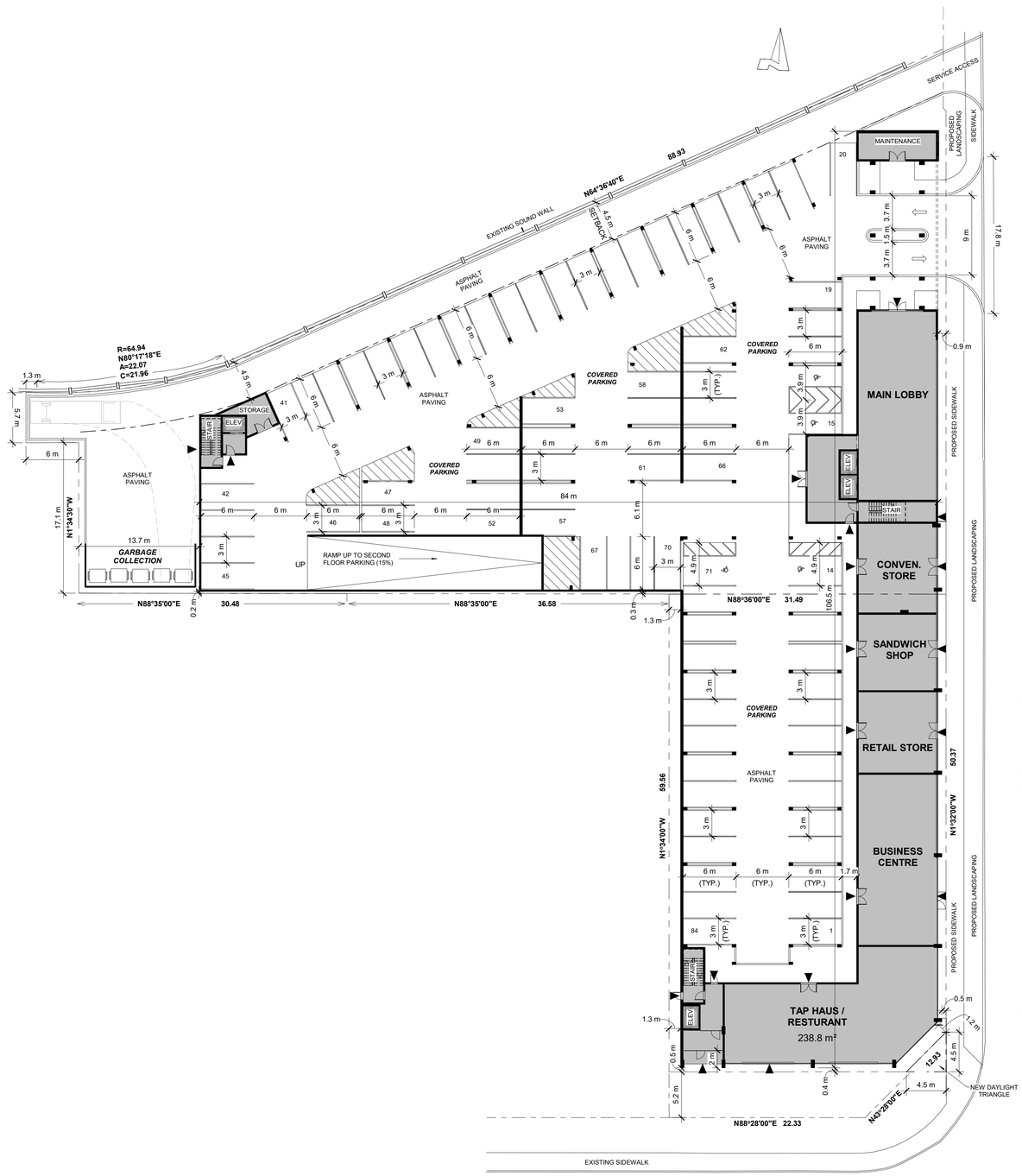

SITE STATISTICS

LOT AREA:		5733.5 m2
BUILDING COVERAGE:	(82%)	4726 m²
GROSS FLOOR AREA:		29942 m²
BUILDING HEIGHT:		12 STOREY (+/- 42m)
MIN. UNIT AREAS:	1 BEDROOM 2 BEDROOM 3 BEDROOM	50 m² 60 m² 70 m²
MIN. PRIVATE OPEN-AIR BALCONY AREA PER UNIT:		10.5 m²

SETBACKS

	REQ'D	PROVIDED
FRONT SETBACK (GARRISON ROAD)	0 m	0.4 m
EXTERIOR SIDE SETBACK (CENTRAL AVE)	0 m	0.5 m
REAR SETBACK (NORTH PROPERTY LINE)	4.5 m	4.5 m
INTERIOR SIDE 1 (WEST / NORTHERN)	0 m	13.7 m
INTERIOR SIDE 1 (WESTERN)	0 m	0.2 m
INTERIOR SIDE 1 (WEST / SOUTHERN)	0 m	1.3 m

COMMERCIAL UNITS

NAME	AREA	LEVEL
BUSINESS CENTRE	170.8 m²	1st FLOOR
CONVEN. STORE	89.3 m²	1st FLOOR
RETAIL STORE	80.8 m²	1st FLOOR
SANDWICH SHOP	75.9 m²	1st FLOOR
TAP HAUS / RESTURANT	238.8 m²	1st FLOOR
WINE BAR	224.3 m²	9th FLOOR
Grand total: 6	879.9 m²	

REQ'D COMMERCIAL PARKING:
879.9 m² / 20 m² = 44 PARKING SPACES

RES. UNIT & PARKING COUNT PER FLOOR

FLOOR LEVEL	RES. UNIT COUNT	PARKING SPACES PROVIDED	TYPE A SPACES	TYPE B SPACES
1st FLOOR	0	84	2	2
2nd FLOOR	7	86	2	1
3rd FLOOR	7	89	2	
4th FLOOR	26			
5th FLOOR	26			
6th FLOOR	26			
7th FLOOR	26			
8th FLOOR	26			
9th FLOOR	14			
10th FLOOR	14			
11th FLOOR	14			
12th FLOOR	14			
TOTAL	200	259	6	3

REQ'D RESIDENTIAL PARKING:
1 x 200 = 200 PARKING SPACES

TOTAL REQ'D PARKING:
RESIDENTIAL PARKING SPACES: 200
COMMERCIAL PARKING SPACES: 44
PEACE BRIDGE PARKING SPACES: 15
TOTAL: 259

MUNICIPAL ADDRESS

7 CENTRAL AVENUE,
PART OF LOT 1, NP 505
FORT ERIE, ONTARIO

BUILDING DESCRIPTION

MAJOR OCCUPANCY
GROUP C - RESIDENTIAL OCCUPANCY

KEY PLAN

GENERAL NOTES

1. ALL WORK INVOLVED IN THE CONSTRUCTION, RELOCATION AND REPAIR OF MUNICIPAL SERVICES FOR THE PROJECT SHALL BE TO THE SATISFACTION OF THE CITY AND AT THE SOLE EXPENSE OF THE OWNER.

2. THE DIMENSIONS, AREAS AND LOCATIONS SHOWN ON THIS PLAN ARE APPROXIMATE AND MAY BE SLIGHTLY ALTERED IN FINAL DESIGN, PROVIDING THE INTENT AND PURPOSE OF THE ORIGINAL PLAN IS MAINTAINED AND ALL RELEVANT ZONING PROVISIONS COMPLIED WITH FURTHER AND NOTWITHSTANDING ANYTHING SHOWN ON THIS PLAN TO CONTRARY, ALL THE SERVICING, GRADING AND DRAINAGE SHALL BE IN ACCORDANCE WITH PLANS FILED IN THE CITY ENGINEER'S OFFICE AND APPROVED BY THE ENGINEER.

JASON PIZZICAROLA DESIGN - ARCHITECTS INC
209 RIDGE ROAD N
RIDGEWAY, ONTARIO, L0S 1N0
T. 905-894-8300
F. 905-894-8400
e-mail jpizzicarola@jpdesign.ca
CERTIFICATE OF PRACTICE : # 4053

GARRISON RD,
FORT ERIE, ON

No.	Description	Date

SITE PLAN

SHEET TITLE:

SITE PLAN &
STATISTICS

DRAWN BY:	JP	DATE:	06/10/20
SCALE:	1 : 250	JOB #:	19081
SHEET NO:			SP1

P:\2019\19081-Compass Height Jeff Andrew\Compass Heights - Sept 24 2020_3.vt

APPENDIX "3" TO ADMINISTRATIVE REPORT PDS-16-2021 DATED FEBRUARY 22, 2021

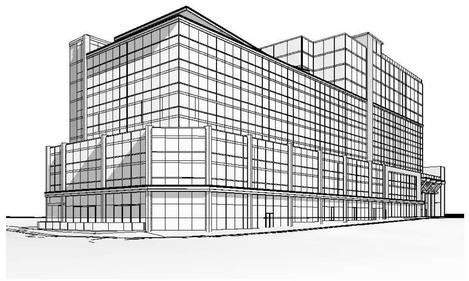

4 3D VIEW - SOUTH

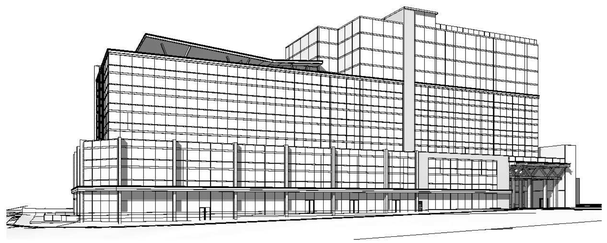

1 3D VIEW - EAST

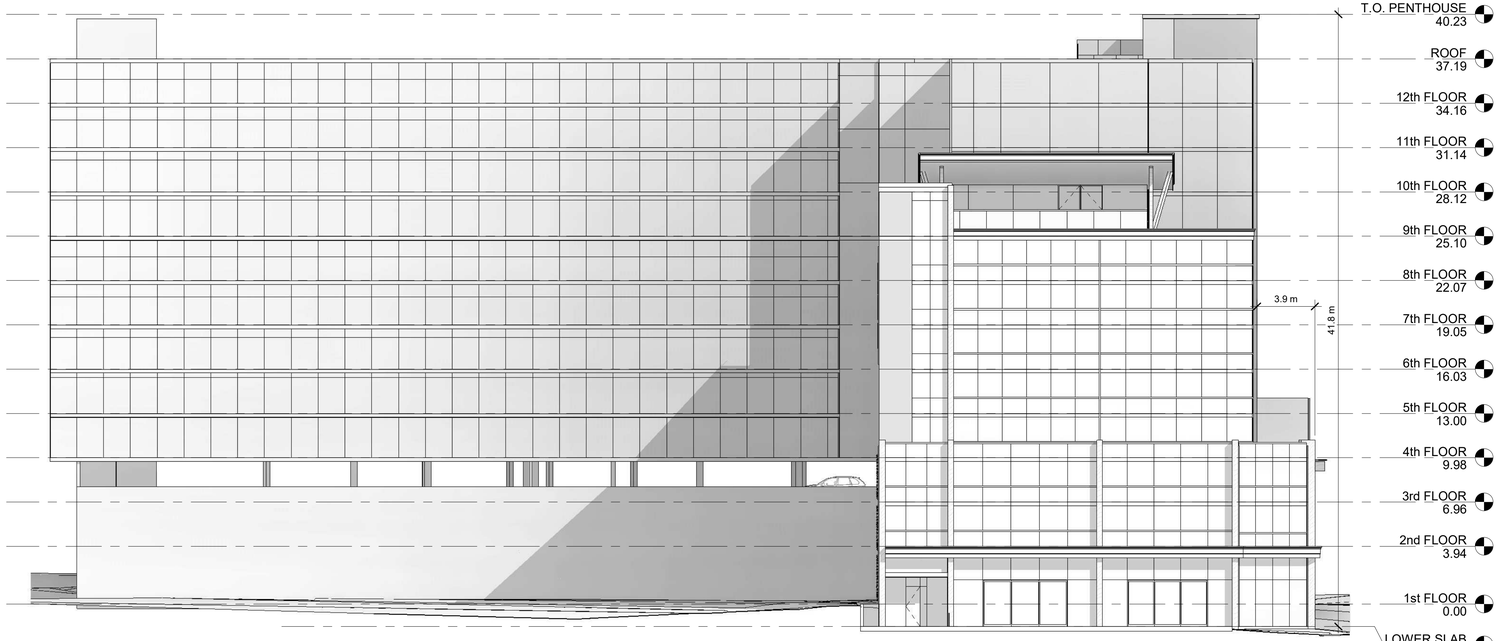

2 SOUTH ELEVATION
1 : 192

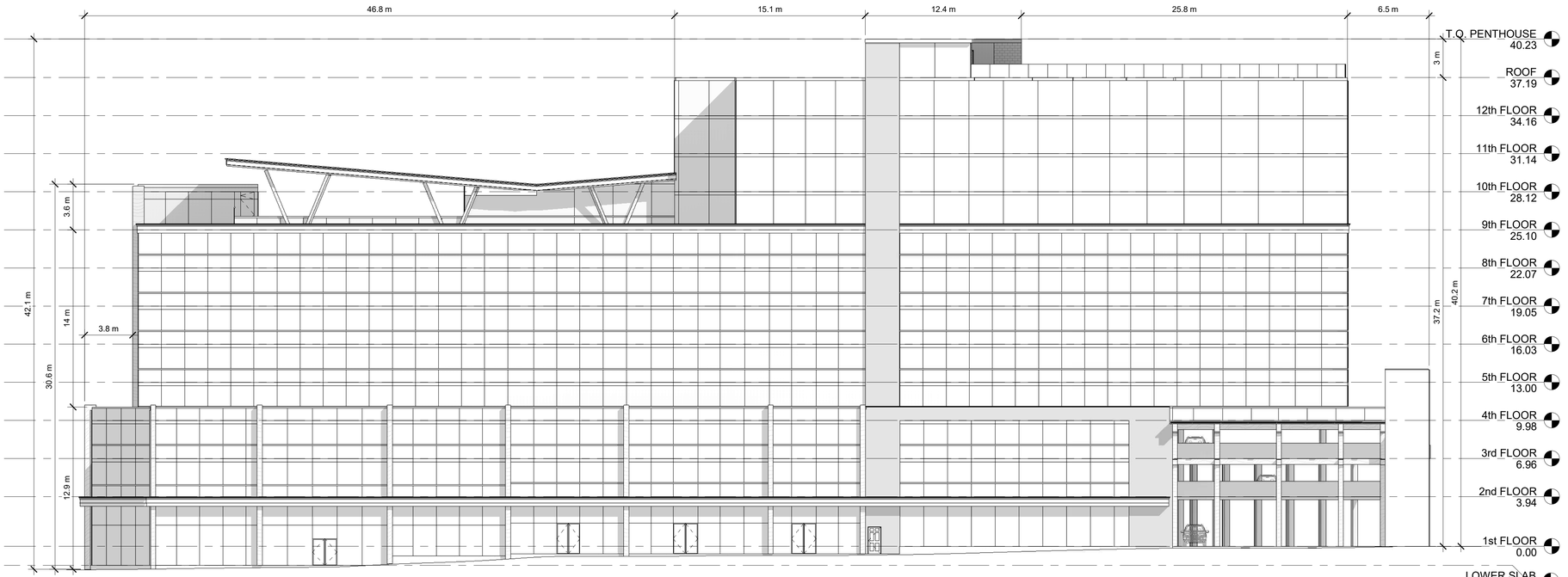

3 EAST ELEVATION
1 : 192

JASON PIZZICAROLA DESIGN - ARCHITECTS INC
209 RIDGE ROAD N
RIDGEWAY, ONTARIO, L0S 1N0
T. 905-894-8300
F. 905-894-8400
e-mail jpizzicarola@jpdesign.ca
CERTIFICATE OF PRACTICE : # 4053

GARRISON RD,
FORT ERIE, ON

No.	Description	Date

SITE PLAN

SHEET TITLE:

ELEVATIONS

DRAWN BY:	Author	DATE:	13/10/20
SCALE:	1/16" = 1'-0"	JOB #:	19081
SHEET NO:			A200

APPENDIX "3" TO ADMINISTRATIVE REPORT PDS-16-2021 DATED FEBRUARY 22, 2021

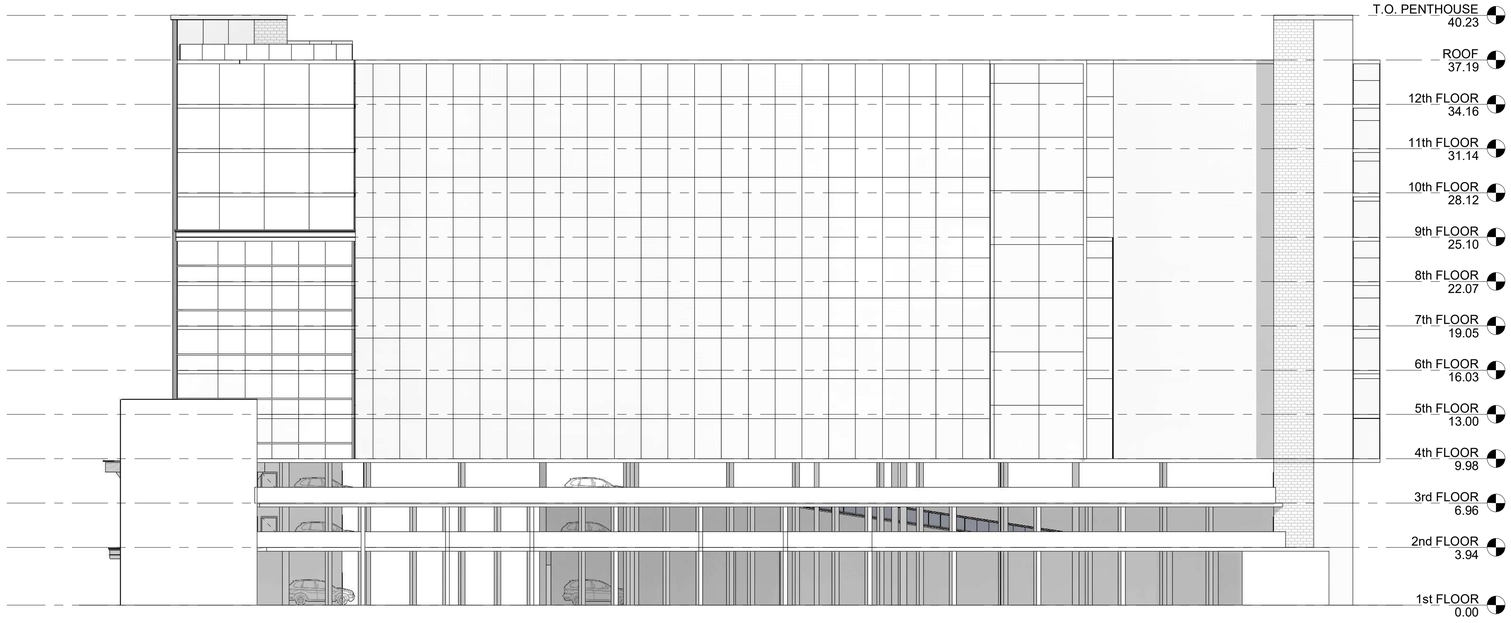

1 NORTH ELEVATION
1 : 192

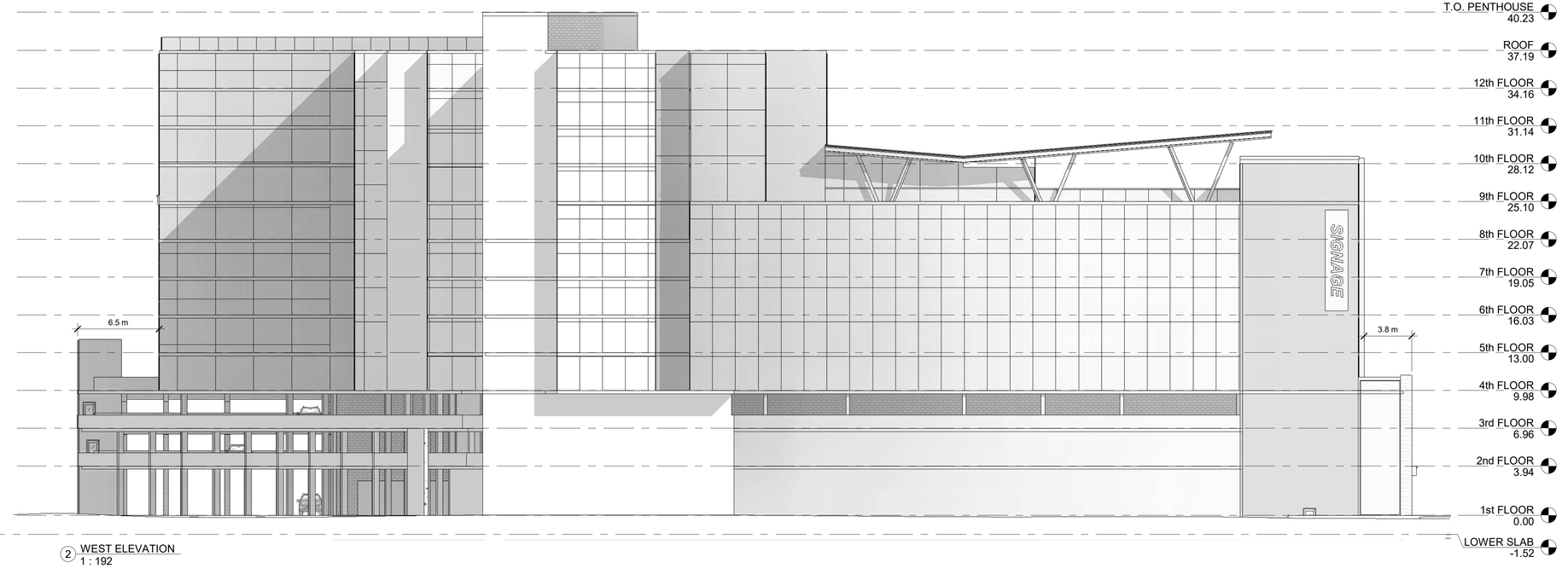

2 WEST ELEVATION
1 : 192

JASON PIZZICAROLA DESIGN - ARCHITECTS INC
209 RIDGE ROAD N
RIDGEWAY, ONTARIO, L0S 1N0
T. 905-894-8300
F. 905-894-8400
e-mail jpizzicarola@jpdesign.ca
CERTIFICATE OF PRACTICE : # 4053

GARRISON RD,
FORT ERIE, ON

No.	Description	Date

SITE PLAN

SHEET TITLE:

ELEVATIONS

DRAWN BY:	JP	DATE:	13/10/20
SCALE:	1/16" = 1'-0"	JOB #:	19081
SHEET NO:			A201

P:\2019\19081-Compass Height Jeff Andrew\Compass Heights - Sept 24 2020_3.rvt

Fw: 7 Central Avenue

Keegan Gennings to: Anamika Dilwaria 09/25/2020 02:15 PM

From: Keegan Gennings/FortErie
To: Anamika Dilwaria/FortErie@TownOfFortErie
History: This message has been replied to.

Keegan Gennings	Fw: 7 Central Avenue	
Anamika Dilwaria	*Thanks a lot. Anamika Dilwaria, M.Pl., MCIP, RPP*	

as requested

Regards,

Keegan Gennings C.B.C.O
Chief Building Official
Town of Fort Erie
905-871-1600 ext. 2515

----- Forwarded by Keegan Gennings/FortErie on 09/25/2020 02:15 PM -----

From: Keegan Gennings/FortErie
To: Anamika Dilwaria/FortErie@TownOfFortErie
Date: 07/28/2020 02:45 PM
Subject: Re: 7 Central Avenue

Hi Anamika,

I have no further comments for the addition of the additional building used for affordable housing at 7 Central.

Regards,

Keegan Gennings C.B.C.O
Chief Building Official
Town of Fort Erie
905-871-1600 ext. 2515

Anamika Dilwaria	All, Attached are few drawing submitted by the a...	07/12/2020 03:11:30 PM

From: Anamika Dilwaria/FortErie
To: Jeremy Korevaar/FortErie@TownOfFortErie, Keegan Gennings/FortErie@TownOfFortErie, Signe Hansen/FortErie@TownOfFortErie, Lola.Emberson@niagararegion.ca
Date: 07/12/2020 03:11 PM
Subject: 7 Central Avenue

All,

Attached are few drawing submitted by the applicant in response to Staff's comments provided on March 26 pre-consultation meeting. Additionally the applicant is also proposing an affordable building fronting on Douglas Street. Leigh Whyte (applicant's agent) would like to obtain staff's input on the revised proposal without going through another pre-con. The plan he has provided as of now is very basic.

It would be helpful if you can provide your comments by Monday, July 27, 2020.

Thanks

Anamika Dilwaria, M.Pl., MCIP, RPP
Senior Development Planner, Planning and Development Services
The Corporation of the Town of Fort Erie
1 Municipal Centre Drive
Fort Erie, Ontario L2A 2S6
TEL: 1-905-871-1600 ext.2507
E-mail-adilwaria@forterie.ca

[attachment "Compass Heights -3D1 -.pdf" deleted by Keegan Gennings/FortErie]
[attachment "Compass Heights -3D2 -.pdf" deleted by Keegan Gennings/FortErie]
[attachment "Compass Heights -3D3 -.pdf" deleted by Keegan Gennings/FortErie]
[attachment "Compass Heights -3D4.pdf" deleted by Keegan Gennings/FortErie]
[attachment "Compass Heights -3D5 -.pdf" deleted by Keegan Gennings/FortErie]
[attachment "Westerly Land - Proposed Access Road and Affordable Housing 200529.pdf" deleted by Keegan Gennings/FortErie]

Re: Request for comments- OPA & ZBA - 7 Central Av

Ed Melanson to: Anamika Dilwaria 09/14/2020 07:05 PM

From: Ed Melanson/FortErie
To: Anamika Dilwaria/FortErie@TownOfFortErie

Anamika Dilwaria	Request for comments- OPA & ZBA - 7 Central Av	
Ed Melanson	*Good Evening Anamika, I have reviewed the attached documents for Compass Heights and have no questio*	

Good Evening Anamika,

I have reviewed the attached documents for Compass Heights and have no questions or comments relating to the Official Plan and Zoning Bylaw amendment requests.

Ed Melanson
Fire Chief / CEMC
Office: (905) 871-1600 ext. 2600
Cell: (905) 329-7255

Anamika Dilwaria	All, Please see the attached documents.	2020-09-02 11:33:33 AM

From:	Anamika Dilwaria/FortErie
To:	Jeremy Korevaar/FortErie@TownOfFortErie, Ed Melanson/FortErie@TownOfFortErie, Keegan Gennings/FortErie@TownOfFortErie, Signe Hansen/FortErie@TownOfFortErie
Cc:	Aaron Butler/FortErie@TownOfFortErie
Date:	2020-09-02 11:33 AM
Subject:	Request for comments- OPA & ZBA - 7 Central Av

All,

Please see the attached documents.

Thanks

Anamika Dilwaria, M.Pl., MCIP, RPP
Senior Development Planner, Planning and Development Services
The Corporation of the Town of Fort Erie
1 Municipal Centre Drive
Fort Erie, Ontario L2A 2S6
TEL: 1-905-871-1600 ext.2507
E-mail-adilwaria@forterie.ca

[attachment "Item 5 - 19026_SURVEY DRAFT 072220.pdf" deleted by Ed Melanson/FortErie] [attachment "Item 6 - Compass Heights - Sun Study - June 25 2020 - Copy.pdf" deleted by Ed Melanson/FortErie] [attachment "Item 6 - Compass Heights - Sun Study - June 25 2020.pdf" deleted by Ed Melanson/FortErie] [attachment "Item 7 - Wind Study 071320 Final - Copy.pdf" deleted by Ed Melanson/FortErie]

Interoffice Memorandum

From: Anamika Dilwaria, Senior Development Planner
Subject: 7 Central Avenue
Combined OPA/ZBA/Draft Plan of Subdivision Application

The lands are currently zoned site-specific Core Mixed Use 1(CMU1-447), in part and Public, in part, in accordance with Zoning By-law No. 129-90, as amended by By-law No. 58-11.

Provision	Regulation	Proposed	Compliance
Minimum Lot Frontage	0m	22.3 m	yes
Min lot area	0 sq.m	5712.5sq m	yes
Minimum Front Yard	0 m	0.6 m	yes
Minimum Interior Side Yard	0m, except the minimum side yard abutting a residential zone shall be 2.5 m	Varies from 0.2 m to 1.3 along the west property line	yes
Minimum Exterior Side Yard	0 m	0.5m to 0.9 m	yes
Minimum Rear Yard	4.5m except the minimum rear yard abutting a residential zone shall be 10m	4.5 m	yes
Maximum Building Height	i) 4 storeys ii) 15m	12 storeys	No (site-specific regulation requested)
Required parking spaces	1 parking space per dwelling unit. 200 x1=**200** spaces Commercial Space- 879.9 Sq. m /20=44 spaces 1 parking space for 20 square metres of commercial space	259 Parking spaces	yes

	15 spaces for Peace Bridge Authority Total spaces required= 200+44+ 15=259		
Minimum floor area per dwelling unit	bachelor Unit: 40 sq. m One-Bedroom Unit: 50 sq. m Two-Bedroom Unit: 60 sq. m Unit comprising three or more bedrooms: 70 sq. m		Yes1
Landscaped area	A minimum of 18.5 sq. m. of open area shall be provided on-site for the exclusive use of each dwelling unit. Where the open area is provided by way of private open-air balcony space directly adjoining a residential unit, a minimum of 10.5 sq m per unit shall be	Balconies with 10.5 sq. in area provided	yes
Section 6.20 (D) (ii)	The maximum width of any joint ingress and egress driveway ramp in a Commercial or Residential Zone measured along the street line shall be 9.0 m.	9 m	yes

Section 6.20 (I) Parking Area Location on the Lot	All yards provided that no part of any parking area, other than a point of ingress/egress, is located closer than 3.0 m to any street line or to any residential zone, except a parking area may be located 0 m from a rear access laneway in C2A, CMU2 and CMU4 Zone	N/A- parking provided in a parking garage	N/A
Parking spaces Dimension	2.7 m x 6 m and 6m except as otherwise provided in this Clause, where the side of a parking space abuts either a lot line or a wall, a column, a pillar, a tree, a fence, a pole		yes
	or other obstruction or part thereof which is 0.5 m or more in height above the level of such parking space, the minimum width of the said parking space shall be 3 m; an		
Accessible Parking spaces	6 Type A 3Type B	6 Type A 3 Type B	yes

Via Email Only

September 22, 2020

File No.: D.10.01.OPA-20-0023 & D.18.01 ZA-20-0056

Mrs. Anamika Dilwaria, M. PL., MCIP, RPP
Senior Development Planner
Town of Fort Erie
1 Municipal Centre Drive
Fort Erie, ON L2A 2S6

Dear Mrs. Dilwaria:

Re: Regional and Provincial Comments
Official Plan and Zoning By-law Amendments
City File: AM-2019-015
Agent: PLW Consulting, Leigh Whyte
Owner: Compass Heights Development Ltd, Mr. Jeff Andrews
7 Central Street
Town of Fort Erie

Regional Development Planning staff has reviewed the information circulated with the applications for Official Plan and Zoning By-law Amendments at the above noted address. The Official Plan Amendment is requesting to allow an increase in the residential density, maximum building height and re-designate the rear portion of the property from Peace Bridge Border Area to Core Mixed Use. The Zoning By-law Amendment proposes to add site-specific provisions to allow an increase in building height. The applications were submitted to allow for the construction of a 12 storey mixed-use building with 217 residential units and 657 square metres of ground floor retail space.

Pre-consultation meetings regarding this proposal were held on April 25, 2019, March 26, 2020 and August 13, 2020. The following comments are provided from a Regional and Provincial perspective to assist the City in considering the applications.

Provincial and Regional Policies

The subject lands are located within a Settlement Area under the 2020 Provincial Policy Statement (PPS) and within the Delineated Built-Up Area under the 2019 Growth Plan for the Greater Golden Horseshoe (Growth Plan). The policies direct growth to

settlement areas and encourage building strong communities through the efficient use of land, resources, infrastructure and public service facilities that are planned or available. Intensification, redevelopment of underutilized lands and building of compact mixed-use developments that diversify the economic base and minimize the length and number of vehicle trips and support use of transit and active transportation are promoted.

The Growth Plan contains policies that encourage the development of complete communities with a diverse mix of land uses that promote economic development and competitiveness and provide a range and mix of housing types. The policies further state that until the Region completes a municipal comprehensive review that is approved and in effect, the annual minimum intensification target contained in the Regional Official Plan for the Town, being fifteen percent (15%), will continue to apply. The Town is identified as a Gateway Economic Zone that recognizes the importance of cross-border trade with the United States, supports economic diversity and promotes increased opportunities for trade, movement of goods and tourism.

The subject site is designated Urban Area in the Regional Official Plan (ROP) and is located within the Niagara Economic Gateway Zone. A full range of residential, commercial and industrial uses are permitted within the Urban Area designation, subject to the availability of adequate municipal services and infrastructure. The ROP promotes higher density development and efficient development in Urban Areas and defers to the Town's Official Plan with respect to density, height, urban design and built form compatibility policies. The Niagara Economic Gateway Zone reflects the area identified in the Growth Plan and supports planning and economic development in these areas. The ROP policies support economic diversity and promote increased opportunities for cross-border trade, movement of goods, and tourism. Tourism plays a very important role in Niagara's economy, providing employment and generating business for support service and supply industries.

The Region supports the proposed development as it encourages the redevelopment of an underutilized property within the settlement area and includes a mix of commercial and residential uses. Regional staff encourage the provision of alternative forms of housing to achieve Provincial and Regional policies and provide residential units that are affordable, accessible and suited to the needs of a variety of households and income groups. The proposal includes a broad variety of unit sizes, including one-bedroom to three-bedroom units that will appeal to a broad range of household and income groups.

Archaeology

The PPS and ROP provide direction for the conservation of significant cultural heritage and archaeological resources. Specifically, Section 2.6.2 of the PPS and Policy 10.C.2.1.13 of the ROP state that development and site alteration are not permitted on lands containing archaeological resources or areas of archaeological potential, unless significant archaeological resources have been conserved. The subject land is identified

as having high archaeological potential based on the Ministry of Heritage, Sport, Tourism and Culture Industries (MHSTCI) Criteria for Evaluating Archaeological Potential and the Town of Fort Erie's Archaeological Master Plan.

A Stage 1-2 Archaeological Assessment prepared by Detritus Consulting Ltd., dated September 5, 2019, was submitted with the application. The Stage 2 Assessment resulted in the identification of no archaeological resources, and the Licensed Archaeologist recommends no additional archaeological assessment.

Regional staff note that the archaeological study area does not include the entire development area proposed by these applications. The Study area identified in Figure 5 reflects only the 7 Central Avenue property and does not include the Peace Bridge Border Area to the north that is part of the area proposed for development by these applications. As such, Regional staff will require a Stage 1-2 Archaeological Assessment for the area not covered by the submitted archaeological assessment, prior to the passage of the amending by-law.

Staff will also require a copy of the acknowledgment letter from the Ministry confirming that all archaeological concerns have been addressed to the satisfaction of the Ministry of Heritage, Sport, Tourism and Culture Industries, which may be included as a site plan condition.

Site Condition

The PPS requires that contaminated sites be remediated as necessary to ensure there will be no adverse effects to the proposed use. The property was previously used for commercial uses and the change in use to residential (i.e. mixed use residential and commercial) requires the mandatory filing of a Record of Site Condition (RSC) in accordance with O. Reg. 153/04 under the *Environmental Protection Act*.

The Phase One prepared by Hallex Environmental Ltd, dated May 14, 2019 and Phase Two ESA prepared by Hallex Environmental Ltd., dated September 18, 2019 were submitted in support of the applications. A Phase One Environmental Site Assessment (ESA) report identified three (3) on-site Potentially Contaminating Activities (PCAs) that resulted in three (3) on-site Areas of Potential Environmental concern (APEC). The APEC included importation of fill Material of unknown quality, parking lot and gasoline and associated products storage in fixed tanks and recommended a Phase Two ESA. The Phase Two revealed soil exceedances to the Ministry of the Environment, Conservation and Parks (MECP) Site Condition Standards for Residential Land Use in a Non-Potable Ground Water Situation. Site remediation via excavation and off-site disposal at a MECP licensed landfill will be required to attain site soil conditions that satisfy the requirements for filing a RSC.

Regional staff note that the Phase One and Phase Two ESA Study Sites do not include the entire development area proposed by these applications. The Study area identified in Figure 1 of both reports reflect only the 7 Central Avenue property and does not include the Peace Bridge Border Area to the north that is part of the area proposed for

development by these applications. As such, Regional staff will require Phase One and Phase Two ESA for the additional area proposed for development that was not covered by the submitted documents prior to the passing of the by-laws.

In accordance with O. Reg. 153/04, a RSC shall be filed prior to change of use on the site. If the Town is to consider the change of use prior to confirmation by the Ministry, the requirement can be satisfied using a Holding zoning provision or as part of a subsequent site plan approval process or through the building permit process. It is noted that the draft Zoning By-law included in the Planning Justification Report includes a Holding Provision that shall be removed upon the approval of the Site Plan Control agreement. Regional staff support the use of the Holding Provision; however, note that the submission RSC should also be required prior to the removal of the Holding Provision. Alternatively, the Town could include the submission of the RSC as a condition of Site Plan approval, prior to the issuance of a building permit.

Noise

The Provincial Policy Statement indicates that major facilities (such as transportation corridors and industrial uses) and sensitive land uses including residences should be appropriately designed, buffered and/or separated from each other to prevent adverse effects from odour, noise and other contaminants, and to minimize risk to public health and safety. A Noise Impact Study prepared by Howe Gastmeier Chapnik Limited (HGC), dated July 6, 2020, was submitted with the applications to evaluate potential noise affecting the proposed development site (residential and commercial uses) and to assess the noise impacts of the development. The study was completed in accordance with Ministry of Environment, Conservation and Park (MECP) NPC-300 Guidelines and concluded that noise control mitigation/measures are required in order to meet MECP Guidelines. It is noted that in Table 3, Prediction Location G is described as 12th Floor Rooftop Patio, however in Figure 4 G is identified on the 9th Floor. The study should be updated to clarify if it is referring to the 9th Floor. It is also noted that in Appendix B, correspondence with the Ministry of Transportation (MTO) references a project in the City of Niagara Falls, as such Regional staff would ask that the consultant confirm that the QEW traffic data (commercial splits) provided in the study are for the proposed development location. Staff would also ask for confirmation that NPC-300 and Niagara Region's guidelines are met with the recommended mitigation/measures.

The study recommends required central air conditioning systems for the building in a location, installation and sound rating that complies with NPC-300. It discusses exterior wall constructions noting that at the time of the study, building elevations were not available and further input regarding the design of exterior walls can be provided during the design development. Upgraded glazing constructions are also recommended for the building and the study recommends that when detailed floor plans and building elevations are available, the glazing should be refined based on actual window to floor area ratios and exterior wall construction. The study also recommends warning clauses to inform future residential of the traffic noise issues and the presence of the surrounding commercial uses.

The study further recommends that prior to issuance of building permits for the development a Professional Engineer, qualified to perform acoustical engineer services, review the exterior wall constructions, architectural elevations, and building elevations to ensure the building façade constructions will provide sufficient sound insulation for indoor spaces and provide any additional measures, as required. The Professional Engineer should also review the mechanical and electrical plans to ensure acceptable sound levels are compliant with Provincial, Regional and Town guidelines and by-laws. In addition, the study recommends that prior to the issuance of occupancy permits, that certification be provided ensuring noise control measures for the development have been properly installed and constructed.

Regional staff require confirmation from the consultant that the QEW traffic data is accurate. It is noted that an updated Noise Study will be required with the future Site Plan application that details the recommended mitigation measures required to meet NPC-300 and Niagara Region's guidelines. Any updated recommendations, if required, with respect to building materials, glazing, and warning clauses for traffic noise can be incorporated into the future site plan agreement to be registered on title. It is also recommended that the warning clauses be included in all agreements of purchase of sale or lease for the residential and commercial units.

Urban Design

This development represents an opportunity to build on and complete the International Gateway Feature as noted in the Gateway Secondary Plan. The proposed development is located on the north-west corner of the intersection of Central Avenue and Garrison Road and, as this is a corner site, it is recommended that enhanced architectural treatments and streetscaping work together to create a prominent gateway feature (i.e. entrance, parkette/square, interconnection with intersection). The Region welcomes that opportunity to collaborate with the Town on the streetscape/public realm and interaction with the built form to determine some creative solutions for this location that will complement the enhanced streetscape existing on the southerly side of Garrison Road. Regional funding through the Public Realm Investment Program (PRIP) may offer a funding contribution towards public realm improvements.

As previous noted, Urban Design staff are generally supportive of the proposed development and the use of reduction of ceiling heights to deal with the grades on-site. Staff reviewed the Landscape Plan prepared by Jamie Douglas, dated July 2020, which shows curb face sidewalks. Staff would like to reiterate that sidewalks should not be curb face, where possible, and street trees should swap locations so tree pits or planting beds are located within the boulevard. Detailed comments from Urban Design staff will be provided at Site Plan application on the overall streetscape/public realm design.

A review of the Pedestrian Wind Study prepared by Gradientwind, dated July 13, 2020, identified that generally wind conditions will be reduced along pedestrian sidewalks on Central Avenue and Garrison Road with the introduction of the proposed development.

The study identified one (1) location at grade level at the southwest corner of the proposed building along Garrison Road where wind speeds are anticipated to exceed the wind safety criterion. The safety criterion is to determine if there are excessive gust speeds that can adversely affect a pedestrian's balance and footing.

The study states that "*since the general area is considered windy under the existing massing scenario, pedestrians likely have a greater tolerance toward strong winds*" but does not make any recommendations to improve wind site conditions. An update to the Pedestrian Wind Study is required to explore solutions, which may include increased setbacks, to reduce this location to a safe wind level. The Region does not support exceedances of pedestrian wind safety criterion along Regional roads. Regional staff and Town staff should continue to work with the design team and Gradientwind to reduce wind speeds associated with the proposed development to safe levels prior to the passing of the by-law.

Regional staff also reviewed the Sun Study prepared by Jason Pizzicarola Design-Architects Inc., dated June 25, 2020 and note that shadows analysis is provided for spring/fall equinox and summer/winter solstice for a single time period only (noon). As such, Regional staff are unable to determine if there are significant shadow impacts on the Regional right-of-ways.

Technical Comments

Niagara Regional Technical staff have completed a review of the following materials, which were provided as part of a zoning by-law application and official plan amendment application for the property of 7 Central Avenue in the Town of Fort Erie:

- Site Plan and Statistics, prepared by Jason Pizzicarola Design Architects Inc., dated August 17, 2020.
- Traffic Brief Updated, prepared by Paradigm Transportation, dated July, 2020.
- Functional Servicing Report, prepared by Robert E. Dale, dated June 30, 2020.

Based on our review, the Region offers the following comments that should be addressed in the future site plan application, all conditions required for the technical requirements for this site will be addressed at the future site plan application.

Waste Collection

Niagara Region provides curbside waste and recycling collection for developments that meet the requirements of Niagara Region's Waste Collection Policy. The subject property is eligible to receive Regional curbside waste and recycling collection provided that the owner bring the waste and recycling to the curbside on the designated pick up day, and that the following limits are not exceeded:

- No limit blue/grey containers;
- No limit green containers; and,

- 4 garbage containers per property
- Collection will be at the curbside only

Based on the plans submitted there is a location shown on the site for garbage and recycling. Due to the size of the development and current limits within the Region's contract, it is assumed that the garbage collection for the site will be private. Recycling collection is being confirmed with Waste Management staff and detailed comments and conditions will be provided at the future site plan application.

Regional Roads

Regional Construction Encroachment Permit

Prior to any construction/work taking place within the Regional road allowance, a Regional Construction, Encroachment, and entrance Permit must be obtained from the Transportation Services Division, Public Works Department.

Regional Sign Permit

Regional staff have reviewed and not the sign information on the plans provided. Further review will be provided at the site plan stage of the development. Please note that the placement of any sign, notice or advertising device within 20m of the centerline of Garrison Road will require a Regional Sign permit. Permit applications can be made through the following link:

http://niagararegion.ca/living/roads/permits/default.aspx

Regional Road Widening

The subject property has frontage along Regional Road 3 (Garrison Road). This section of road has a substandard road allowance. The designated road allowance is 30.5 meters as identified in the Regional Official Plan. Therefore, the applicant is required to gratuitously grant the following widening to the Region:

- A widening across the frontage of the subject property of 5.2 metres. This is required in order to achieve 15.25 meters from the original centerline of this road section.

Daylight Triangle

An updated daylight triangle of 4.5 metres x 4.5 metres will be required at the intersection of Garrison Road and Central Avenue. Regional staff ask that the daylight triangle be shown on the development plans going forward.

Please be advised that, after the preconsultation meeting for this application, daylighting requirements for Regional roads have been updated. We will continue to maintain the request for the smaller triangle through these applications and forthcoming site plan

application; however, it is noted that should there be future applications a 10m x 10m daylighting triangle will be requested.

Regional Road Encroachments

Regional staff have reviewed the information provided and it is unclear whether there are proposed encroachments into the Regional ROW for retaining walls. New encroachments that pose safely concerns are normally not supported by staff. In order for Transportation staff to provide detailed comments whether the encroachments will be permitted, additional information is required identifying the exact locations, number and height of retaining walls and providing explanation as to their necessity. Staff will provide a detailed response to the proposed encroachments once the additional information is received.

Please note that if encroachments are permitted, the owner is required to enter into an encroachment agreement with the Region, carry sufficient insurance, pay the required encroachment permit fees and annual fee for the encroachment and the agreement is registered on title for all future owner's information.

Transportation Impact Study

Regional Transportation staff have reviewed the TIS prepared by Paradigm, dated July 2020, and offer the following comments:

- Figure 5 does not contain any of the application measures of effectiveness (MOE); it appears unpopulated and therefore comment cannot be made as to acceptability.
- Given the conclusions and recommendations, the traffic generated by the proposed development does not appear to significantly impact any of Niagara Region's roadways and/or intersections.

Overall, Figure 5 should be populated and the Brief resubmitted for confirmation that the MOE for the Future Total Traffic scenario are acceptable to Niagara Region.

Site Servicing

Although the Functional Servicing Report notes the location of the connections to the various services, a site servicing plan was not provided for these applications. Regional staff will require a servicing plan be provided showing the proposed servicing and road cuts to determine the extent of restoration required and impacts to the Regional Roads.

Regional Bicycle Network

The subject property has frontage on a roadway that is designated as part of the Regional Niagara Bicycling Network. If the bicycle route is currently not established and identified with

signage, it is the intent of the Region to make provisions for doing so when an appropriate opportunity arises.

Protection of Survey Evidence

Survey evidence adjacent to Regional road allowances is not to be damaged or removed during the development of the property. The future site plan agreement entered into for this development should include a clause that requires the applicant to obtain a certificate from an Ontario Land Surveyor stating that all existing and new evidence is in place at the completion of said development.

Conclusion

Regional staff note that there is additional information required for review to ensure a fulsome review of Provincial Policies and Pans and the Regional Official Plan. Regional staff recommend that the Official Plan and Zoning By-law amendments not be considered by staff until such time as Regional staff have reviewed and commented on the requested additional information, including

- Stage 1-2 Archaeological Assessment for the Peace Bridge Border area of the development;
- Phase 1 and Phase 2 Environmental Assessments for the Peace Bridge Border area of the development;
- Additional clarification from the Noise Consultant;
- Updated Pedestrian Wind Study to explore solutions to ensure that wind levels are reduced to safe levels;
- Updated Sun Study to reflect different times of day;
- Updated TIS to include information noted above.

Additional comments will be provided upon review of the additional information. Should you have any questions concerning the above noted comments, please do not hesitate to contact me at 905-688-9000 extension 3518.

Respectfully,

Lola Emberson

Lola Emberson, MCIP, RPP
Senior Development Planner

cc: Mr. P. Busnello, Manager of Development Planning, Niagara Region
Mr. K. Ahmad, Manager, Urban Design, Niagara Region
Ms. S.Dunsmore, P.Eng., Manager of Development Engineering, Niagara Region

Knights Inn Fort Erie (Shree Dutt Corporation)
Vikram Patel to: adilwaria@forterie.ca 09/17/2020 11:27 AM

From: "Vikram Patel" <vikibaba@hotmail.com>
To: "adilwaria@forterie.ca" <adilwaria@forterie.ca>

Vikram Patel	Vikram Patel	Knights Inn Fort Erie (Shree Dutt Corporation)

Hello Anamika.
Good Day!

Thank you for returning my call this morning.
I am writing this email to participate in the zoom meeting which is scheduled for Thursday, Sept 24, 2020
My Name: Vikram Patel, Email: vikibaba@hotmail.com, Cell: 289-321-1977, kindly let me know if you need any further information.

I will soon email you again with my concerns if any related to this proposed high rise building plan, in order to submit in front of council board.

Thanks you again for your time...

Thanks & Regards

VIKRAM PATEL
Knights Inn - Fort Erie
139 Garrison Road
Fort Erie, ON L2A 1M3
Tel: 905-871-7777
Fax: 905-871-2297

Fw: 7 CENTRAL AVENUE & 100-1 QUEEN STREET: OPA and ZBL- Appendix 5

Anamika Dilwaria to: Holly Galloway

2020-10-26 03:43 PM

Hide Details

From: Anamika Dilwaria/FortErie
To: Holly Galloway/FortErie@TownOfFortErie
History: This message has been forwarded.

Forwarded by Anamika Dilwaria/FortErie on 10/26/2020 03:42 PM

From: "Ron Rienas" <rr@peacebridge.com>
To: "adilwaria@forterie.ca" <adilwaria@forterie.ca>
Cc: "Kira Dolch (kdolch@forterie.ca)" <kdolch@forterie.ca>, "Rocky Vacca" <rvacca@sullivan-mahoney.com>
Date: 09/25/2020 04:22 PM
Subject: 7 CENTRAL AVENUE & 100-1 QUEEN STREET: OPA and ZBL

Hi Anamika,

I tried getting on the Zoom public meeting for the above noted, yesterday afternoon on my phone. While I was able to able to get on Zoom and see everything, there was no sound so I switched to YouTube and watched and listened to the meeting on that platform.

As you know, the Buffalo & Fort Erie Public Bridge Authority (PBA) has an agreement of purchase and sale with Compass Heights Developments for the north half of the development lands. The transaction is not scheduled to close until May 3, 2021.

During the public meeting and in the documents on-line it was stated that the developer is looking for an Official Plan special policy designation to increase the density and the height and a site specific zoning by-law amendment to increase the height, but that in all other respects the development complies with the CMU-1 zone requirements.

In reviewing the site plan last week and based on what was presented yesterday, I note that the setback from the proposed north property line is only 0.6 metres at the west end widening to 2.3 metres at the east end. Assuming that the north property line is the Peace Bridge Authority's high noise wall, that amount of space is not adequate to provide PBA access to the wall for with vehicles and equipment for maintenance purposes. Also, the structural stability of the wall may be compromised by excavation and construction activity in such close proximity. The agreement of purchase and sale reads:

> IT IS AGREED that the Buffalo and Fort Erie Public Bridge Authority will have access to the property for the purposes of maintaining the wall on the north side of the property. Buyer shall obtain Planning Act consent for this easement and shall be defined and registered on title.

That clause was written on the premise of the original plans that Compass Heights submitted with the offer to purchase. It assumed that the parking lot would remain a parking lot and the PBA would have unfettered access to the wall across the parking lot. That is no longer the case based on the now submitted plans.

The CMU-1 zone requires a 4.5 metre rear yard. The rear yard line is the northerly property line. The Town's public notice states *"The applicant is requesting to rezone the lands to a site specific Core Mixed Use 1 (CMU1) to allow an increase in the maximum building height."* There is no mention of reducing the rear yard setback. The PBA requires that 4.5 meter setback, as stipulated by the CMU-1 zone remain.

I did notify Mr. Andrews of this requirement on September 17, 2020 but it was not mentioned by him or his consultants during the September 24 public meeting.

I would also confirm that the PBA will be leasing back 15 parking spaces from Compass Heights. The agreement of purchase and sale reads:

> IT IS AGREED that the Buyer will lease back 15 (fifteen) parking spaces to the Seller at the yearly rate of $1 (one dollar) per year. This lease is to run for 99 (ninety-nine) years with the option to renew for a further 99 (ninety-nine)years. This lease shall be registered on title on closing. The Buyer shall obtain Planning Act consent for said lease and the Seller shall have the right to register Notice of this Lease on title
>
> THE BUYER AGREES to maintain the parking lot including snowing removal, line painting, etc.

Lastly, while not an official plan or zoning issue, I do wish to inform the Town of certain building design requirements and warning clauses to be included on title recognizing the proximity to a busy truck route adjacent to the property. The agreement of purchase and sale reads:

> IT IS AGREED THAT the Buyer covenants and agrees to include in all future development agreements, agreements of purchase and sale and leases relating to the residential units to be developed on the property the following warning clause:
>
> Buyers/Tenants are advised that noise and emission levels due to truck traffic on the adjacent truck route for international crossings at the Peace Bridge may occasionally interfere with some activities of the dwelling occupants. All dwelling units will be designed with the provisions for adding central air conditioning. Installation of central air conditioning by the occupant will allow windows and exterior doors to remain closed thereby insuring acceptable interior sound levels and air quality.
>
> The Seller agrees to permit any reasonable amendments to the above warning clause requested by the Town of Fort Erie or any commenting agency.

If you have any questions or require clarification on any of the above, please do not hesitate to contact me.

Ron Rienas
General Manager
Buffalo & Fort Erie Public Bridge Authority

100 Queen Street, Fort Erie, ON L2A 3S6 | 1 Peace Bridge Plaza, Buffalo, NY 14213
rr@peacebridge.com T 905-994-3676| T 716-884-8636| F 905-871-9940 | F 716-884-2089 | C 905-651-2206

ATTN:
ANAMIKA DILWARIA
MCIP, RPP, Senior Development Planner
Planning and Development Services Department
Town Hall, 1 Municipal Centre Drive, Fort Erie, ON L2A 2S6
Tel: 905-871-1600 etx. 2507, Email: adilwaria@forterie.ca

Date: 26th October 2020

From:
VIKRAM PATEL - SHREE DUTT CORPORATION – O/A KNIGHTS INN FORT ERIE
139 Garrison Road, Fort Erie, ON L2A 1M3
Tel: 905-871-7777 Cell: 289-321-1977 Email: vikibaba@hotmail.com

SUB: 7 CENTRAL AVENUE & 100-1 QUEEN STREET – PRUPOSED 12 STORY MIXED-USE BUILDING

Good Day!
This is with the reference to the above mention address and proposed site for 12 story mixed use building. Me and my family are resident of Town Of Fort Erie since last 14 years and are involved into hospitality and food retail business. We are always in favour of growth and development of town and community. This email / letter is not intended to bring any kind of hurdles to proposed plan, but just to make sure my current business / building / property is not affected at all due to this proposed plan.

I have some serious concerns and question related to this proposed building plan next to my property:-

1.	**VIBRATION B'COS OF HEAVY POUNDING:** We all know this proposed construction may last for 4 to 5 years minimum. (start to finish). This proposed construction is going to happen just next to my property, which is not even a foot far from my property. There will be very heavy POUNDING to put in metal/steel beams and that is going to VIBRATE a lot. This may damage / crack my FOUNDATION and damage my building too. Along with building it will damage my parking lot as well. In addition to this, such kind of heavy noisy vibration will affect my business, as no one would prefer to live at my establishment because of this vibrations and noise.
2.	**WATER DRAINAGE:** Proposed building as per plan is on North/East and East/South direction to my property. And this proposed RAISED building will flood my property, as there is no water drainage. In case of heavy rain or snow, my lower level rooms will be under water because of lack of water drainage and raised height of proposed building.
3.	My current property has been known and doing business as LAKE VIEW facility over 70 years now. This proposed building plan will bring my establishment under huge black shadow. And this continues 4 to 5 years of construction will force my accommodation business to suffer big time. Me and my family has put in our precious 14 valuable years to run and operate this property successfully so far and would like to make sure our business and building is not affected because of proposed high rise building plan.

I would appreciate if Town Of Fort Erie Council Members, Owners and Developers of Proposed Property take my concern in positive manner and come up with some solution which will be in favor of both the parties. Being a small business owner, I tried to present my concern in nontechnical manner, which may not be appropriate. But this must be addressed before any decision been made.

APPENDIX "6" TO ADMINISTRATIVE REPORT PDS-16-2021 DATED FEBRUARY 22, 2021

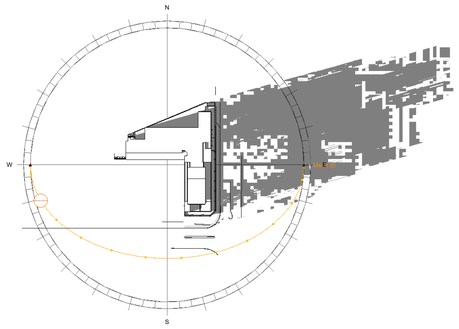

12 SPRING EQUINOX 5pm

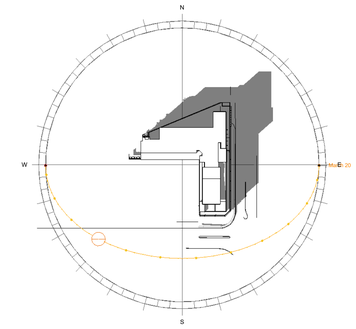

11 SPRING EQUINOX 3pm

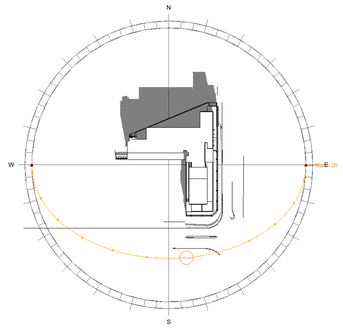

10 SPRING EQUINOX 12

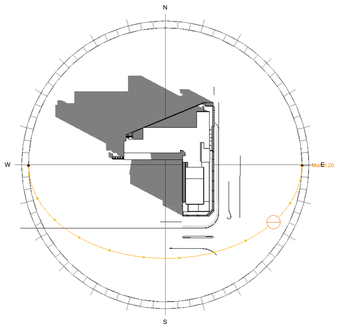

9 SPRING EQUINOX 9am

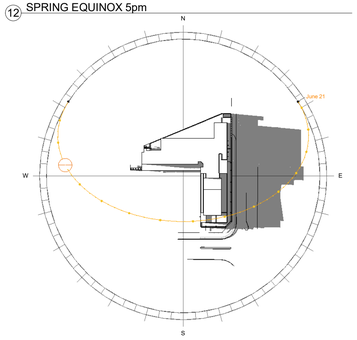

16 SUMMER SOLSTICE 5pm

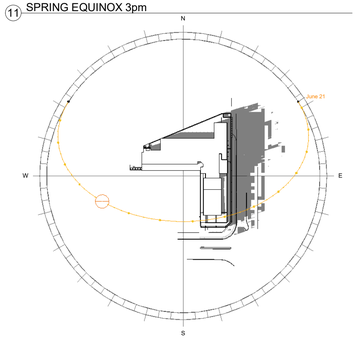

15 SUMMER SOLSTICE 3pm

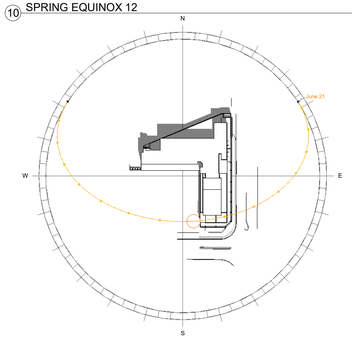

14 SUMMER SOLSTICE 12

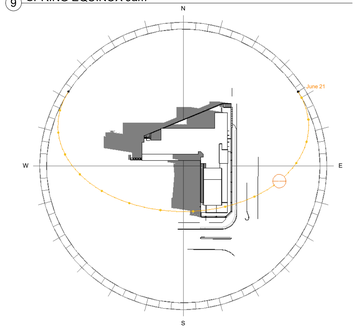

13 SUMMER SOLSTICE 9am

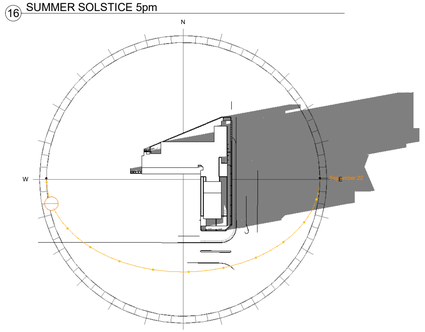

4 FALL EQUINOX 5pm

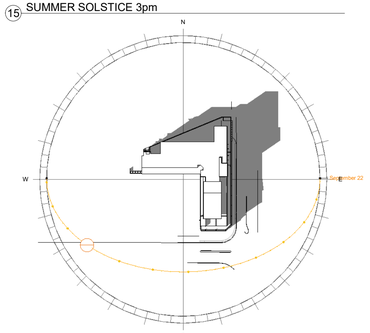

3 FALL EQUINOX 3pm

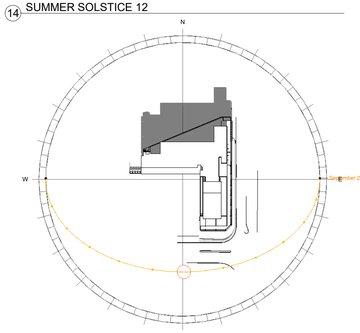

2 FALL EQUINOX 12

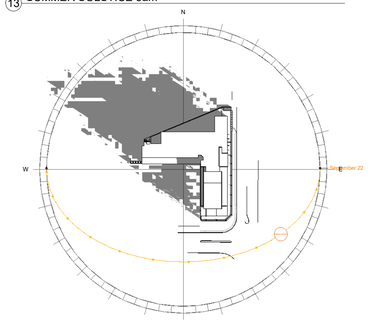

1 FALL EQUINOX 9 am

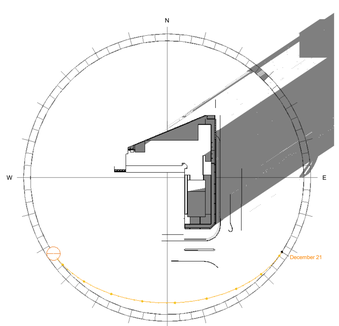

8 WINTER SOLSTICE 5pm

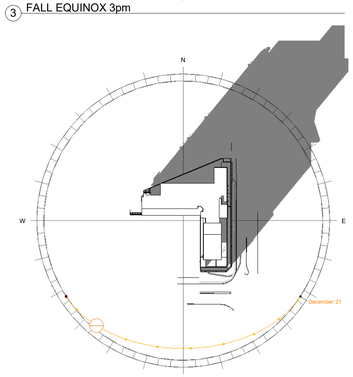

7 WINTER SOLSTICE 3pm

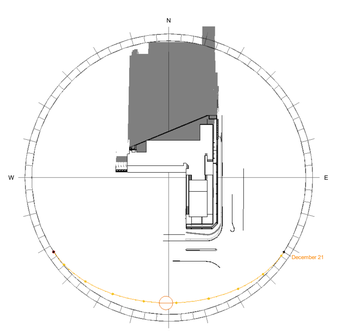

6 WINTER SOLSTICE 12

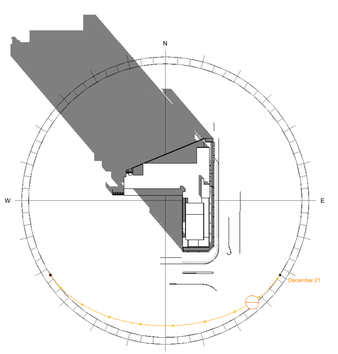

5 WINTER SOLSTICE 9am

JASON PIZZICAROLA DESIGN - ARCHITECTS INC
209 RIDGE ROAD N
RIDGEWAY, ONTARIO, L0S 1N0
T. 905-894-8300
F. 905-894-8400
e-mail jpizzicarola@jpdesign.ca
CERTIFICATE OF PRACTICE : # 4053

GARRISON RD,
FORT ERIE, ON

No.	Description	Date

CONCEPT

SHEET TITLE:

SUN STUDY

DRAWN BY:	JP	DATE:	24/09/20
SCALE:		JOB #:	19081
SHEET NO:	A900		

P:\2019\19081-Compass Height Jeff Andrews\Compass Heights - Sept 24 2020.rvt

APPENDIX "7" TO ADMINISTRATIVE REPORT PDS-16-2021 DATED FEBRUARY 22, 2021

The Municipal Corporation of the Town of Fort Erie

By-law No. XX-2021

Being A By-law To Enact An Amendment To The Official Plan Adopted By By-law No. 150-06 For The Town Of Fort Erie Planning Area

Amendment No.49
P. Leigh Whyte- Agent
Compass Heights Development Ltd–- Owner
7 Central Avenue and a portion of 100-1 Queen Street

350302-0119

The Municipal Council of the Corporation of the Town Of Fort Erie in accordance with the provisions of Section 17 of the Planning Act R.S.O. 1990 enacts as follows:

1. **That** amendment No. 49 to the Official Plan for the Town of Fort Erie consisting of the attached explanatory text is hereby adopted and approved.

2. **That** this by-law shall come into force and take effect on the day of the final passing thereof.

3. **That** the Clerk of the Town of Fort Erie is authorized to effect any minor modifications, corrections or omissions solely of an administrative, numerical, grammatical, semantical or descriptive nature to this by-law or its schedules after the passage of this by-law.

Read a first, second and third time and finally passed this XX day of XXXX, 2021.

_____
Mayor

_____
Clerk

I, Carol Schofield, the Clerk, of The Corporation of the Town of Fort Erie hereby certify the foregoing to be a true copy of By-law No. XX-2021 of the said Town. Given under my hand and the seal of the said Corporation this ____ day of _____, 20

AMENDMENT NO. 49

TO THE

OFFICIAL PLAN

FOR THE

CORPORATION OF THE TOWN OF FORT ERIE

CONTENTS

PART "A" - THE PREAMBLE

Section 1 - Title and Components

Section 2 - Purpose of Amendment

Section 3 - Location of this Amendment

Section 4 - Basis of this Amendment

Section 5 - Implementation and Interpretation

PART "B" - THE AMENDMENT

Introductory Statement

Details of the Amendment

Schedule "A" - Land Use Plan

PART "C" - THE APPENDICES

Appendix 1 - Notice of Public Information Processes

Appendix 2 - Public Meeting Minutes

Appendix 3 - Circulation Comments

PART "A" - THE PREAMBLE

SECTION 1

TITLE AND COMPONENTS

This document, when approved in accordance with Sections 17 and 21 of The Planning Act, 1990, shall be known as Amendment No. 49 to the Official Plan adopted by By-law No. 150-06 of the Fort Erie Planning Area.

Part "A", the Preamble does not constitute part of this amendment.

Part "B", the Amendment, consisting of the following text and map (designated Schedule "A") constitutes Amendment No. 49 to the Official Plan adopted by By-law No. 150-06 for the Fort Erie Planning Area.

Also attached is Part "C", the Appendices, which do not constitute part of this amendment. These Appendices (1 through 3 inclusive) contain the background data, planning considerations and public involvement associated with this amendment.

SECTION 2

PURPOSE OF THIS AMENDMENT

The purpose of this Amendment is to effect a change to the land use designation of a portion of the subject property from Peace Bridge (Border Services Area) to Core-Mixed Use and add “Special Policy Area 24 Compass Heights Developments” designation as shown in Schedule A to facilitate the construction of a 12-storey mixed-use building and permitting the subject lands to develop for a maximum residential density of 349 units per hectare.

SECTION 3

LOCATION OF THIS AMENDMENT

The lands, which are the subject of this amendment, are located at 7 Central Avenue and a portion of 100-1 Queen Street shown on Schedule "A" attached hereto.

SECTION 4

BASIS OF THIS AMENDMENT

Subsection 13.7(III) of the Official Plan adopted by By-law No. 150-06 of the Fort Erie planning area provides that amendments may be made to the Official Plan. Policies in Subsection 13.7(III) have been considered in the preparation of this amendment and the following factors have been reviewed in supporting this amendment to the Official Plan:

a) The need for the proposed use:

The subject lands are designated Core Mixed-Use in the Official Plan. The Core-Mixed-Use designation allows the land to be developed for a mixture of residential and commercial uses. The applicant is proposing to re-designate the northerly portion of the property from Public to Mixed-Use designation to allow the subject lands to be developed comprehensively for the proposed mixed -use building and increase the residential density to 348.8 units per hectare.

The applicant's proposal to construct a 12-storey mixed use building which will include 879.9 square metres of commercial space and 200 dwelling units meets the intent of the Official Plan as follows:

i. The Official Plan promotes mixed-use building with apartment dwelling units above the commercial uses. The applicant is proposing majority of the commercial space on the main floor. The residential dwellings will be located on the above floors.

ii. The proposed development will be located at the intersection of two arterial roads, Garrison Road and Central Avenue. Both these roads will provide convenient vehicular access. Further, proximity to the Queen Elizabeth Highway (QEW) will also provide convenient highway access Lastly, pedestrian infrastructure exists in the surrounding area and will be further improved by this development.

iii. The proposal aims at consolidating two parcels of lands to provide a more comprehensive development.

iv. The increased density will allow efficient use of underutilized urban land and the apartment building will provide alternative form of housing. The proposal will assist the municipality in achieving it growth targets.

b) The extent to which the existing areas in the proposed categories are developed, and the nature and adequacy of such existing development:

The southerly portion of subject lands is currently vacant, while the northerly portion contains a parking lot. The surrounding land uses are mostly commercial. The proposed residential

development will help to support the existing commercial uses. Further, a mix of commercial and residential development will help in creating a complete community

c) The physical suitability of the land for such proposed use, and in the case of lands exhibiting or abutting a Natural Heritage feature, demonstration of compliance with the Natural Heritage policies of this plan:

The subject lands are not constrained by any natural heritage feature. The site itself is physically suitable for the proposed uses.

d) The location of the area under consideration with respect to:

(i) the adequacy of the existing and proposed highway system in relation to the development of such proposed areas,
(ii) the convenience and accessibility of the site for vehicular and pedestrian traffic and the traffic safety in relation thereto, and
(iii) the adequacy of the potable water supply, sewage disposal facilities, and other municipal services in view of the policies contained in this Plan and in accordance with technical reports or recommendations of the Ministry of the Environment and the Regional Niagara Health Services Department and any other appropriate authority deemed advisable;

The subject lands are located at the northwest corner of Central Avenue and Garrison Road, which are both regional roads. Further, both Central Avenue and Garrison Road are arterial roads capable of handling greater volumes of traffic. The Traffic Study submitted with the application confirms that the existing roads can handle the volume of vehicular traffic as a result of the development. Further, the site is located in close proximity to QEW and will provide convenient highway access to future residents. Pedestrian infrastructure exists in the surrounding area and will be improved by this development. Lastly, the proposed development will have access to municipal services. A Holding (H) symbol is included within the proposed Zoning By-law Amendment to ensure that the sanitary servicing system has sufficient capacity to accommodate the proposed use.

e) The compatibility of the proposed use with uses in adjoining areas:

The majority of the surrounding lands uses are commercial with an exception of Peace Bridge Border Service Area located to the north of the subject lands. The proposed mixed-use building will be compatible with the surrounding commercial land uses. The proposed building will be located close to Garrison Road. The Official Plan policies promote buildings to be generally situated at or close to the front street line, but allows varied setbacks in order to provide interesting facade variations. Though, the proposed building will be significantly taller than the abutting building in the area, the tired design of the building provides an aesthetically pleasing design and also minimizes adverse impact on the abutting properties. The portion of the building closer to Garrison Road will have a maximum building height of 9 storeys while the 10 and 12 storey portions will be located along the north easterly portion, which will provide an adequate setback from the abutting properties and will have minimal shadowing impact of the abutting westerly property.

f) The effects of such proposed use on the surrounding area in respect of the minimizing of any possible depreciating or deteriorating effect upon adjoining properties:

There is no evidence to suggest that the proposed mixed-use building will have a depreciating or deteriorating effect upon adjoining properties. On the contrary, the proposed development may act as a catalyst to bring new development in the area, having an overall positive effect on adjoining properties.

g) The potential effect of the proposed use on the financial position of the Municipality:

The proposed re-designation of the subject property will not negatively affect the financial position of the municipality as all the works associated with the proposed development are the responsibility of the developer. The proposed residential development will provide the municipality with an additional tax base and development charges. Through the Zoning By-law Amendment, Council may also require community benefits in the form of a Section 37 Agreement with the developer, which will have a positive effect on the financial position of the municipality.

h) The potential effect of the proposed use in relation to the intent and implementing regulations of the Environmental Protection Act.

None.

SECTION 5

IMPLEMENTATION AND INTERPRETATION

The relevant policies of the Official Plan adopted by By-law No. 150-06 of the Fort Erie planning area shall apply to the implementation and interpretation of this Amendment.

PART "B" - THE AMENDMENT

All of this part of the document entitled "Part "B" - The Amendment" consisting of the following policies and attached maps designated as Schedule "A" (Land Use Plan) constitute Amendment No. 49 to the Official Plan adopted by By-law No. 150-06 for the Fort Erie Planning Area. The Official Plan adopted by By-law No. 150-06 for the Fort Erie Planning Area is hereby amended as follows:

1. The land use designation of Part 1 shown on Schedule “A” attached hereto shall change from Public to Core-Mixed Use.

2. The subject lands described as Parts 1 and 2 on the attached Schedule “A” are hereby redesignated to:

Special Policy Area 24- Compass Heights Development

3. Notwithstanding the Core-Mixed Use designation, the subject lands can be developed for a maximum residential density of 349 units per hectare.

PART “C” - THE APPENDICES

Appendix 1	-	Notice of Public Meeting
Appendix 2	-	Public Meeting Minutes
Appendix 3	-	Circulation comments

The Municipal Corporation of the Town of Fort Erie

By-law No. XX-2021

Being a By-law to Amend Zoning By-law No. 129-90
Leigh Whyte- Agent
Compass Heights Development Ltd–- Owner
7 Central Avenue and a portion of 100-1 Queen Street

350309-0509

Whereas an application was received from P.Leigh Whyte, (Agent) on behalf of Compass Heights Development Ltd. (Owner) to amend the Town's Comprehensive Zoning By-law No. 129-90 as amended, for the lands described as 7 Central Avenue and a portion of 100-1 Queen Street, and

Whereas a Public Meeting pursuant to Section 34(12) of the *Planning Act*, R.S.O. 1990, c.P.13 was held on November 2, 2020, and

Whereas it is deemed desirable to amend the Comprehensive Zoning By-law No. 129-90 as amended, pursuant to the recommendations of Report No. PDS-XX-2021 considered and approved at the Regular Council meeting of February 22, 2021;

Now therefore the Municipal Council of The Corporation of the Town of Fort Erie enacts as follows:

1. **That** Schedule "A" of By-law No. 129-90 as amended, is further amended by changing the zoning of the lands as described above and shown on the attached Appendix "1" from "Public (P) Zone" (Part 1) and Core Mixed-Use 1(CMU1-447) Zone (Part 2) to Core Mixed Use 1 Holding CMU-659 (H) Zone.

2. **That** By-law No.129-90 as amended, is further amended by adding to "Section 26 – Core Mixed Use 1 (CMU1) Zone" Subsection – "Exceptions to the Core Mixed Use 1 (CMU1) Zone" the following exceptions:

"CMU1-659 (XX-2021) 7 Central Avenue and a portion of 100-1 Queen Street (Parts 1 and 2)

These lands are zoned "Core Mixed Use 1 (CMU1-659) Zone", and all of the provisions of By-law No. 129-90 as amended that relate to lands zoned "Core Mixed Use 1 (CMU1) Zone" by this by-law shall apply to those lands zoned "Core Mixed Use 1 (CMU1-659) Zone" subject to the following special regulation:

a)	Minimum Lot Frontage	27 metres
b)	Minimum lot area	5733.5 square metres

c)	Minimum Front Yard—	0 metre for 1 to 4 storeys 4 metres for 5 to 9 storeys 45 metres for 10 to 12 storeys
d)	Minimum Interior Side (westerly)	1 metres for 1 -12 storeys
		0 metre for 1 to 4 storeys
	Minimum Interior Side Yard (southerly)	6.5 metres for 5 to 12 storeys
e)	Minimum Exterior Side Yard	0 metre for 1 to 4 storeys 4 metres for 5 to 12 storeys
f)	Minimum Rear Yard	4.5 metres
g)	Maximum Height of the Building	12 storeys (42 metres)
h)	Maximum Number of Dwelling Units	200

3. That pursuant to Section 36(1) of the Planning Act the "H" Holding Symbol shall be removed upon the upgrade to the sanitary sewer system to support the permitted uses to the satisfaction of the Town of Fort Erie for the lands shown as Appendix "1". No person shall use the Lands described in Appendix "1" for any purpose, prior to the H symbol being removed pursuant to the *Planning Act*.

4. The owner of the lands is required, pursuant to subsection 37(3) of the Planning Act, to enter into one or more agreements with the Town to provide a monetary contribution toward the facilities, services and matters referred to below. The height of the buildings or structures permitted by the CMU1-659 Zone shall only be permitted subject to the execution of the agreement, whereby the owner of the lands agrees to:

a) Provide a $150,000 contribution towards the funding of the Town's future Community Improvement Plan for affordable housing. The funding shall be used in the vicinity of the subject lands, as detailed in the agreement.

Provide a $150,000 contribution towards wayfinding improvements at the vicinity of Central Avenue and the Queen Elizabeth Way, including but not limited to the "Welcome to Fort Erie" signage and landscaping.

5. **That** the Clerk of the Town is authorized to effect any minor modifications, corrections or omissions solely of an administrative, numerical, grammatical, semantical or descriptive nature to this by-law or its schedules after the passage of this by-law.

Read a first, second and third time and finally passed this XX day of XXXX, 2021.

_____
Mayor

_____
Clerk

I, Carol Schofield, Clerk, of The Corporation of the Town of Fort Erie certifies the foregoing to be a true copy of By-law No. XX-2021 of the said Town. Given under my hand and the seal of the said Corporation, this day of , 20

_____

THIS SECTION 37 AGREEMENT dated the XX day of XXXX, 2021

B E T W E E N:

COMPASS HEIGHTS DEVELOPMENT LTD
(hereinafter called the “Owner”)

- and -

THE CORPORATION OF THE TOWN OF FORT ERIE

(hereinafter called the “Town”)

WHEREAS

A. The Owner is the registered owner of lands in the Town of Fort Erie municipally known as 7 Central Avenue and a portion of 100-1 Queen Street; more particularly described in the attached Schedule "A" (the "Site");

B. The Owner applied to the Municipality to amend Town of Fort Erie Zoning By-law No. 129-90 and seeking permission to increase the height of development otherwise permitted to allow the development of a 12-storey mixed-use building with 200 dwelling units and 879.9 square metres of commercial floor space (the "Development") and the application has been approved by the Council of the Municipality;

C. Section 37 of the Planning Act, R.S.O. 1990, c. P.13, as amended (the "Planning Act") permits the Council of the Municipality to pass a zoning by-law to authorize increases in the height and density of development otherwise permitted by the by-law in return for the provision of such facilities, services or matters as are set out in the by-law, provided there is an Official Plan in effect in the Municipality that contains provisions relating to the authorization of increases in height and density of development;

D. The Official Plan for the Municipality contains provisions relating to the authorization of an increase in the height of development above 4 storeys;

E. Pursuant to subsection 37(3) of the Planning Act the Municipality has elected to require the Owner to enter into an agreement with the Municipality dealing with the facilities, services or matters to be provided by the Owner in return for an increase in the height or density of its development; and

F. Council, at its meeting held on XXXX, 2021, passed By-law No. XX -2021 under s. 34 of the Planning Act, which increases the height of development otherwise permitted in return for the provision of such facilities, services and matters as are set out in such by-law;

G. The Owner has elected to provide certain facilities, services and matters in return for an increase in height as described in the Amending By-law attached as Schedule "B" and to enter into an agreement dealing with those facilities, services and matters.

H. Pursuant to s. 37(3) and (4) of the Planning Act the Owner enter into this agreement, this agreement may be registered against the Lands, and the Town is entitled to enforce the provisions of this agreement against the Owner and, subject to the Registry Act, R.S.O. 1990, c. R.20, and the Land Titles Act, R.S.O. 1990, c. L.5, any and all subsequent owners of the Lands;

NOW THEREFORE THIS AGREEMENT WITNESSETH that in consideration of the premises and the covenants hereinafter expressed and the sum of TWO DOLLARS ($2.00) of lawful money of Canada, now paid by each party to the other, the receipt and sufficiency of which is hereby acknowledged, and for other valuable consideration, the Owner and the Municipality agree as follows:

PART I

DEFINITIONS AND BASIS OF AGREEMENT

1.1 Definitions

The definitions set out in this clause apply to this agreement and the Schedules attached to this agreement:

"Amending By-law" means Zoning By-law No. XX-2021, attached hereto as Schedule "B";

"Building Permit" means a permit to construct a building within the Lands pursuant to section 8 of the *Building Code Act, 1992*, S.O. 1992, c. 23, but does not for the purposes of this agreement include a permit for demolition or for excavation;

"Architectural Design" means all aspects of the configuration, appearance and performance of the Development, including, without limiting the generality of the foregoing, surface articulation, podium design, exterior materials, roof structure, pedestrian-scale uses, design of the public realm, and pedestrian circulation;

"Council" means the municipal council for the Town of Fort Erie**;**

"Development" means the construction of and improvement s to and on the Site that is the subject of the Amending By-law and as is described in recital B to this Agreement;

"Director of Planning & Development Services" means the Director of Community & Development Services for the Town from time to time or the holder

of the office exercising the functions presently performed by the said director and includes his or her designate;

"Final Disposition" means the final disposition of the Amending By-law with all applicable appeal periods having lapsed with no appeals, referrals, applications for review or applications to court having been launched or with any such appeals, referrals, applications for review or applications to court having been finally determined by the issuance of an order of the Ontario Municipal Board or court which finally disposes of the matter;

"Lands" means the lands described in Schedule "A" which are affected by the Amending By-law;

"**Parties**" means the Owner and the Municipality;

"**Party**" means any one of either the Owner or the Municipality;

"**Site"** means the lands described in Schedule "A";

"**Site Plan**" means any plan approved by Council or its delegate pursuant to the Planning Act, R.S. 0. 1 990, c. P.13, in connection with the Development;

1.2 Legal Description Lands

This Agreement applies to the Owner's Lands, the legal description of which is set out in Schedule "A".

1.3 Scope of Agreement

This Agreement shall define all of the duties, liabilities and obligations of the Owner with respect to the provision of the facilities, services or matters to the Town in exchange for an increase in the height which may be granted to the Owner for its development of the Lands and in furtherance of proposed amendments to the Town's Comprehensive Zoning By-law No. 129-90, and such other matters as are more specifically set out herein.

1.4 Jurisdiction to Enter into Agreement

(1) The parties acknowledge that this Agreement is being entered into by them pursuant to the authority of ss. 37 of the *Planning Act*. The Town represents that it has the legal authority to adopt and pass the Amending By-law and to enter into this Agreement with the Owner.

(2) The Owner, on behalf of both itself as well as its successors and assigns, acknowledges and agrees that it shall be estopped from contesting, before any court of competent jurisdiction, the power or authority of the Town to adopt or enact the Amending By-law and to enter into this Agreement.

PART II

COMMUNITY BENEFITS

SECTION 37 CONTRIBUTION

2.1 - Cash contribution towards future affordable housing initiatives

2.1.1 The Owner shall pay a cash contribution of $150,000.00, assessed at the rate of 4% of $3,770,000, the estimated property value based on the Council approval for a 12-storey mixed-use building.

2.1.2 The cash contribution amount of $150,000 is valid for a 5 years term. In an event the owner does not proceed with the construction within the 5-year timeframe, the Town will require an updated appraisal to assess the new market value. The cash contribution amount will be assessed at the rate of 4% of the new market value.

2.1.3 The cash contribution shall be provided to the Municipality, prior to the issuance of the Building Permit relating to any aspect of the Development is issued.

2.1.4 The contribution will be allocated in a dedicated account by the Municipality to fund the future Community Improvement Plan for affordable housing. The contribution will be allocated to projects within the geographical area generally bound by the Niagara River to the east, Lakeshore Road to the south, Concession Road to the west and Bertie Street to the north.

2.2 Consent to Amending By-law

2.2.1 The Owner consents to the enactment of the Amending By-law.

2.2.2 The Owner consents to the repeal of the Amending By-law by Council if the Owner is in default of its obligations under this Agreement and the Owner has failed or refused to correct such default within ninety {90} days of notice of such default being given by the Municipality, and the Owner further covenants and agrees not to appeal, object or otherwise challenge the repealing of the Amending By- law.

2.2.3 The Municipality shall not repeal the Amending By-law pursuant to section 2.2.2 if the alleged default is the subject of arbitration or court action that has been commenced by notice properly given under section 10 of this Agreement. If, following the final disposition of the arbitration or court action, the Owner is in default, section 2.3.3 shall apply.

2.3 Site Plan Agreement

2.3.1 The Owner understands and agrees that it shall be required to enter into a Site Plan Agreement pursuant to Section 41 of the *Planning Act* for the facilities, services and matters required pursuant to this Agreement, which shall further define the Standards and Specifications, financial securities and warranties required, and provide for the acceptance and assumption of Services.

2.3.2 The Owner, on behalf of both itself as well as its successors and assigns, acknowledges and agrees that it shall be estopped from contesting before any administrative tribunal or court of competent jurisdiction, the power or authority of the Town to impose such conditions or requirements in an agreement authorized pursuant to Section 41 of the *Planning Act.*

PART III

ADMINISTRATION

3.1 Registration of Agreement

The parties hereby consent to the registration of this Agreement or notice of it against the title to the lands comprising the Lands.

3.2 Notice

All notices required by this Agreement shall be in writing and shall be considered to have been validly given when delivered by hand, or deposited for mailing by Canada Post, Registered Mail service, to the address of the party to whom such notice is directed (as set forth below), or sent by facsimile transmission or e-mail or other means of written communication that effectively conveys the message to the party to whom such notice is directed, as follows:

If to the Owner: Compass Heights Development Ltd.
240 Jarvis Street
Fort Erie, Ontario L2A 2S5
Attention: Jeffery Andrews
Phone: (905)-359-6403
E-mail: Jeff.andrews@compasslanddevelopments.com

If directed to the Town to:
Town of Fort Erie
1 Municipal Centre Drive
Fort Erie, Ontario L2A 2S6
Attention: Jennifer Stirton Town Solicitor
Phone: (905) 871-1600 Ext 2210
E-mail: jstirton@forterie.ca

or such other address of which either party has notified the other, in writing, and any such notice mailed or delivered shall be deemed good and sufficient notice under the terms of this Agreement.

3.3 Costs, Inclusions

Every provision of this Agreement by which the Owner is obligated in any way shall be deemed to include the words “at the expense of the Owner” unless the context otherwise requires. Notwithstanding the generality of and without limiting the scope of the foregoing, the Owner covenants and agrees that it will pay and fully indemnify the Town in respect of any taxes, including Harmonized Sales Tax (“HST”) eligible and payable by the Town arising from the provision, conveyance or dedication of any facilities, services or matters provided for in this Agreement.

3.4 Indemnification

(1) The Owner covenants and agrees to save and keep completely harmless and fully indemnify the Town and each of the persons under the Town's jurisdiction, including its elected officials, its officers, directors, employees, and agents, from and against all manner of actions, suits, claims, executions and demands which may be brought against or made upon the Town and any of the aforementioned persons under the Town's jurisdiction, and of, from and against all loss, costs, charges, damages and expenses which may be sustained, incurred or paid by the Town and any of the aforementioned persons arising in any way by reason of any work performed or approvals obtained by the Owner pursuant to this Agreement, including the materials installed any work done or materials installed or constructed by the Town, in default of the obligations of the Owner pursuant to this Agreement and the occupation of any municipal lands, by the Town or its agents or contractors, and the Owner agrees that it will pay to the Town and to any of the aforementioned persons under its jurisdiction on demand any loss, costs or damages which may be sustained, incurred or paid by the Town.

(2) Notwithstanding the foregoing, the Town acknowledges that the foregoing indemnity from the Owner shall not apply to any loss, costs, charges, damages and expenses arising from the negligence and/or wilful misconduct of the Town and/or any persons acting under its jurisdiction.

(3) The obligations of the Owner to indemnify the Town under the provisions of this section shall survive any termination of this Agreement.

3.5 Further Assurances

The parties agree that, at all times, upon every reasonable written request so to do, they shall make, execute, deliver or cause to be made, done, executed and delivered, all such further acts, deeds, assurances and things as may be required for more effectively implementing and carrying out the true intent and meaning of this Agreement.

3.6 Agreement Does Not Fetter Council's Legislative Discretion

Notwithstanding any other provision of this Agreement, the parties agree that none of the provisions of this Agreement is intended to operate, nor shall have the effect of operating in any way to fetter either the Council which authorized the execution of this Agreement or any of its successors in the exercise of any of Council's discretionary powers, including the power to pass, amend or repeal by-laws; to adopt, amend or rescind Official Plan Amendments; and to approve or withhold approval to allow any demolition, relocation, construction, alteration, remodelling or any other things or act which may materially affect any building, structure or part thereof on the Land.

3.7 Failure is Not Waiver

The failure of either party to require performance by the other party of any obligation under this Agreement at any time shall in no way affect its right thereafter to enforce such obligation, nor shall any such failure be taken or held to be a waiver of the performance of the same or any other obligation under this Agreement at any later time.

3.8 Force Majeure

Notwithstanding anything in this Agreement to the contrary, if the Owner or the Town are *bona fide* delayed in or prevented from performing any obligation arising under this agreement by reason of strikes or other labour disturbances, civil disturbance, material shortage, restrictive government laws, regulations or directives, acts of public enemy, war, riots, sabotage, crime, lightning, earthquake, fire, hurricane, tornado, flood, explosion or other act of God, then the performance of such obligation is excused for so long as such cause exists, and the party so delayed shall be and is entitled, without being in breach of this Agreement, to carry out such obligations within the appropriate time period after the cessation of such cause.

3.9 Binding Law

Any reference herein to any law, by-law, rule, regulation, order or act of any government, governmental body or other regulatory body shall be construed as a reference thereto as amended or re-enacted from time to time or as a reference to any successor thereto.

3.10 Enforcement of Agreement

The Owner covenants and agrees that the facilities, works and matters required to be constructed or provided by this Agreement shall be constructed or provided and maintained by the Owner at its sole risk and expense, and to the satisfaction of the Town acting reasonably. Furthermore, the Owner covenants and agrees that, upon any failure by it to do any act that is required pursuant to this Agreement, the Town may, in addition to any remedy it may have under this Agreement or generally at law, enter onto the Lands and do the said act or remedy the failure or deficiency at the owner's expense and collect the cost thereof in like manner as municipal taxes as provided for in section 446 of the *Municipal Act, 2001*, S.O. 2001, c. 25.

3.11 Specific Performance

The Owner acknowledges that any breach of this Agreement by the Owner would not be adequately compensated by payment of damages and, accordingly, the Owner admits that specific performance is an appropriate form of remedy in the event of default by the Owner.

3.12 Time of the Essence

Time is of the essence of this Agreement and every part of this Agreement and no extension or variation of this Agreement shall operate as a waiver of this provision, provided that the time for doing or completing of any matter provided for herein may be extended or abridged by an agreement in writing signed by the Town and the Owner or by their respective lawyers who may e specifically authorized in that regard.

3.13 Agreement Binding on Successors and Assigns

This Agreement shall ensure to the benefit of, and be correspondingly binding upon the parties and their respective successors and assigns.

3.14 Schedules

The provisions set out in Schedules "A", "B", "C", "D" are attached to and form part of this Agreement.

3.15 Commencement of Agreement

This Agreement shall commence on the date of execution and delivery of this Agreement by the parties.

IN WITNESS WHEREOF the Owner has executed this agreement the XX day of XXXX, 2021

COMPASS HEIGHTS DEVELOPMENT LTD.

Per: _____
Name:
Title:

c/s

Per: _____
Name:
Title:

I/We have authority to bind the corporation.

IN WITNESS WHEREOF the Town has executed this agreement the XX day of XXXX, 2021.

THE CORPORATION OF THE TOWN OF FORT ERIE

Per: _____
Wayne Redkop, Mayor

c/s

Per: _____
Carol Schofield, Town Clerk

We have authority to bind the corporation.

SCHEDULE "A"

LEGAL DESCRIPTION OF LANDS

SCHEDULE “B”

Amending Zoning By-law No. XX-2021

SCHEDULE-"C"

AMENDING BY-LAW SCHEDULE

SCHEDULE "D"

CALCULATION OF SECTION 37 CONTRIBUTION

Scenario A- With both the parcels designated Core Mixed Use and Zoned Core-Mixed Use 1-447. A maximum building height of 4 storey and estimated maximum density of 75 units per hectare, implying 43 residential units an addition to commercial space. 49 combined units

Scenario B- With both the parcels designated Core Mixed Use and Zoned Core-Mixed Use 1-447. A maximum building height of 12 story with the proposed density of 348.8 units per hectare, with 200 dwelling units and 879.9 square metres of retail space. 206 combined units

SCENARIO A- Estimated current Hypothetical Market Value = $1, 565.00

SCENARIO B-- Estimated prospective Hypothetical Market Value= $3,770,000

Cash Contribution calculated based on 4% of Increased valve of land = $150,800 (rounded down) to $150,000.00

THIS SECTION 37 AGREEMENT dated the XX day of XXXX, 2021

B E T W E E N:

COMPASS HEIGHTS DEVELOPMENT LTD
(hereinafter called the “Owner”)

- and -

THE CORPORATION OF THE TOWN OF FORT ERIE

(hereinafter called the “Town”)

WHEREAS

A. The Owner is the registered owner of lands in the Town of Fort Erie municipally known as 7 Central Avenue and a portion of 100-1 Queen Street; more particularly described in the attached Schedule "A" (the "Site");

B. The Owner applied to the Municipality to amend Town of Fort Erie Zoning By-law No. 129-90 and seeking permission to increase the height of development otherwise permitted to allow the development of a 12-storey mixed-use building with 200 dwelling units and 879.9 square metres of commercial floor space (the "Development") and the application has been approved by the Council of the Municipality;

C. Section 37 of the Planning Act, R.S.O. 1990, c. P.13, as amended (the "Planning Act") permits the Council of the Municipality to pass a zoning by-law to authorize increases in the height and density of development otherwise permitted by the by-law in return for the provision of such facilities, services or matters as are set out in the by-law, provided there is an Official Plan in effect in the Municipality that contains provisions relating to the authorization of increases in height and density of development;

D. The Official Plan for the Municipality contains provisions relating to the authorization of an increase in the height of development above 4 storeys;

E. Pursuant to subsection 37(3) of the Planning Act the Municipality has elected to require the Owner to enter into an agreement with the Municipality dealing with the facilities, services or matters to be provided by the Owner in return for an increase in the height or density of its development; and

F. Council, at its meeting held on XXXX, 2021, passed By-law No. XX -2021 under s. 34 of the Planning Act, which increases the height of development otherwise permitted in return for the provision of such facilities, services and matters as are set out in such by-law;

G. The Owner has elected to provide certain facilities, services and matters in return for an increase in height as described in the Amending By-law attached as Schedule "B" and to enter into an agreement dealing with those facilities, services and matters.

H. Pursuant to s. 37(3) and (4) of the Planning Act the Owner enter into this agreement, this agreement may be registered against the Lands, and the Town is entitled to enforce the provisions of this agreement against the Owner and, subject to the Registry Act, R.S.O. 1990, c. R.20, and the Land Titles Act, R.S.O. 1990, c. L.5, any and all subsequent owners of the Lands;

NOW THEREFORE THIS AGREEMENT WITNESSETH that in consideration of the premises and the covenants hereinafter expressed and the sum of TWO DOLLARS ($2.00) of lawful money of Canada, now paid by each party to the other, the receipt and sufficiency of which is hereby acknowledged, and for other valuable consideration, the Owner and the Municipality agree as follows:

PART I

DEFINITIONS AND BASIS OF AGREEMENT

1.1 Definitions

The definitions set out in this clause apply to this agreement and the Schedules attached to this agreement:

"Amending By-law" means Zoning By-law No. XX-2021, attached hereto as Schedule "B";

"Building Permit" means a permit to construct a building within the Lands pursuant to section 8 of the *Building Code Act, 1992*, S.O. 1992, c. 23, but does not for the purposes of this agreement include a permit for demolition or for excavation;

"Architectural Design" means all aspects of the configuration, appearance and performance of the Development, including, without limiting the generality of the foregoing, surface articulation, podium design, exterior materials, roof structure, pedestrian-scale uses, design of the public realm, and pedestrian circulation;

"Council" means the municipal council for the Town of Fort Erie**;**

"Development" means the construction of and improvement s to and on the Site that is the subject of the Amending By-law and as is described in recital B to this Agreement;

"Director of Planning & Development Services" means the Director of Community & Development Services for the Town from time to time or the holder

of the office exercising the functions presently performed by the said director and includes his or her designate;

"Final Disposition" means the final disposition of the Amending By-law with all applicable appeal periods having lapsed with no appeals, referrals, applications for review or applications to court having been launched or with any such appeals, referrals, applications for review or applications to court having been finally determined by the issuance of an order of the Ontario Municipal Board or court which finally disposes of the matter;

"Lands" means the lands described in Schedule "A" which are affected by the Amending By-law;

"**Parties**" means the Owner and the Municipality;

"**Party**" means any one of either the Owner or the Municipality;

"**Site"** means the lands described in Schedule "A";

"**Site Plan**" means any plan approved by Council or its delegate pursuant to the Planning Act, R.S. 0. 1 990, c. P.13, in connection with the Development;

1.2 Legal Description Lands

This Agreement applies to the Owner's Lands, the legal description of which is set out in Schedule "A".

1.3 Scope of Agreement

This Agreement shall define all of the duties, liabilities and obligations of the Owner with respect to the provision of the facilities, services or matters to the Town in exchange for an increase in the height which may be granted to the Owner for its development of the Lands and in furtherance of proposed amendments to the Town's Comprehensive Zoning By-law No. 129-90, and such other matters as are more specifically set out herein.

1.4 Jurisdiction to Enter into Agreement

(1) The parties acknowledge that this Agreement is being entered into by them pursuant to the authority of ss. 37 of the *Planning Act*. The Town represents that it has the legal authority to adopt and pass the Amending By-law and to enter into this Agreement with the Owner.

(2) The Owner, on behalf of both itself as well as its successors and assigns, acknowledges and agrees that it shall be estopped from contesting, before any court of competent jurisdiction, the power or authority of the Town to adopt or enact the Amending By-law and to enter into this Agreement.

PART II

COMMUNITY BENEFITS

SECTION 37 CONTRIBUTION

2.1 - Cash contribution towards the Gateway Entrance Feature Project

2.1.1 The Owner shall pay a cash contribution of $150,000.00, assessed at the rate of 4% of $3,770,000, the estimated property value based on the Council approval for a 12-storey mixed-use building.

2.1.2 The cash contribution amount of $150,000 is valid for a 5 years term. In an event the owner does not proceed with the construction within the 5-year timeframe, the Town will require an updated appraisal to assess the new market value. The cash contribution amount will be assessed at the rate of 4% of the new market value.

2.1.3 The cash contribution shall be provided to the Municipality, prior to the issuance of the Building Permit relating to any aspect of the Development is issued.

2.1.4 The contribution will be allocated in a dedicated account by the Municipality to fund the Gateway Entrance Feature Project, including the design, public process and construction of a Gateway Feature in the vicinity of the QEW and Central Avenue.

2.2 Consent to Amending By-law

2.2.1 The Owner consents to the enactment of the Amending By-law.

2.2.2 The Owner consents to the repeal of the Amending By-law by Council if the Owner is in default of its obligations under this Agreement and the Owner has failed or refused to correct such default within ninety {90} days of notice of such default being given by the Municipality, and the Owner further covenants and agrees not to appeal, object or otherwise challenge the repealing of the Amending By- law.

2.2.3 The Municipality shall not repeal the Amending By-law pursuant to section 2.2.2 if the alleged default is the subject of arbitration or court action that has been commenced by notice properly given under section 10 of this Agreement. If, following the final disposition of the arbitration or court action, the Owner is in default, section 2.3.3 shall apply.

2.3 Site Plan Agreement

2.3.1 The Owner understands and agrees that it shall be required to enter into a Site Plan Agreement pursuant to Section 41 of the *Planning Act* for the

facilities, services and matters required pursuant to this Agreement, which shall further define the Standards and Specifications, financial securities and warranties required, and provide for the acceptance and assumption of Services.

2.3.2 The Owner, on behalf of both itself as well as its successors and assigns, acknowledges and agrees that it shall be estopped from contesting before any administrative tribunal or court of competent jurisdiction, the power or authority of the Town to impose such conditions or requirements in an agreement authorized pursuant to Section 41 of the *Planning Act.*

PART III

ADMINISTRATION

3.1 Registration of Agreement

The parties hereby consent to the registration of this Agreement or notice of it against the title to the lands comprising the Lands.

3.2 Notice

All notices required by this Agreement shall be in writing and shall be considered to have been validly given when delivered by hand, or deposited for mailing by Canada Post, Registered Mail service, to the address of the party to whom such notice is directed (as set forth below), or sent by facsimile transmission or e-mail or other means of written communication that effectively conveys the message to the party to whom such notice is directed, as follows:

If to the Owner: Compass Heights Development Ltd.
240 Jarvis Street
Fort Erie, Ontario L2A 2S5
Attention: Jeffery Andrews
Phone: (905)-359-6403
E-mail: Jeff.andrews@compasslanddevelopments.com

If directed to the Town to:
Town of Fort Erie
1 Municipal Centre Drive
Fort Erie, Ontario L2A 2S6
Attention: Jennifer Stirton Town Solicitor
Phone: (905) 871-1600 Ext 2210
E-mail: jstirton@forterie.ca

or such other address of which either party has notified the other, in writing, and any such notice mailed or delivered shall be deemed good and sufficient notice under the terms of this Agreement.

3.3 Costs, Inclusions

Every provision of this Agreement by which the Owner is obligated in any way shall be deemed to include the words “at the expense of the Owner” unless the context otherwise requires. Notwithstanding the generality of and without limiting the scope of the foregoing, the Owner covenants and agrees that it will pay and fully indemnify the Town in respect of any taxes, including Harmonized Sales Tax (“HST”) eligible and payable by the Town arising from the provision, conveyance or dedication of any facilities, services or matters provided for in this Agreement.

3.4 Indemnification

(1) The Owner covenants and agrees to save and keep completely harmless and fully indemnify the Town and each of the persons under the Town's jurisdiction, including its elected officials, its officers, directors, employees, and agents, from and against all manner of actions, suits, claims, executions and demands which may be brought against or made upon the Town and any of the aforementioned persons under the Town's jurisdiction, and of, from and against all loss, costs, charges, damages and expenses which may be sustained, incurred or paid by the Town and any of the aforementioned persons arising in any way by reason of any work performed or approvals obtained by the Owner pursuant to this Agreement, including the materials installed any work done or materials installed or constructed by the Town, in default of the obligations of the Owner pursuant to this Agreement and the occupation of any municipal lands, by the Town or its agents or contractors, and the Owner agrees that it will pay to the Town and to any of the aforementioned persons under its jurisdiction on demand any loss, costs or damages which may be sustained, incurred or paid by the Town.

(2) Notwithstanding the foregoing, the Town acknowledges that the foregoing indemnity from the Owner shall not apply to any loss, costs, charges, damages and expenses arising from the negligence and/or wilful misconduct of the Town and/or any persons acting under its jurisdiction.

(3) The obligations of the Owner to indemnify the Town under the provisions of this section shall survive any termination of this Agreement.

3.5 Further Assurances

The parties agree that, at all times, upon every reasonable written request so to do, they shall make, execute, deliver or cause to be made, done, executed and delivered, all such further acts, deeds, assurances and things as may be

required for more effectively implementing and carrying out the true intent and meaning of this Agreement.

3.6 Agreement Does Not Fetter Council's Legislative Discretion

Notwithstanding any other provision of this Agreement, the parties agree that none of the provisions of this Agreement is intended to operate, nor shall have the effect of operating in any way to fetter either the Council which authorized the execution of this Agreement or any of its successors in the exercise of any of Council's discretionary powers, including the power to pass, amend or repeal by-laws; to adopt, amend or rescind Official Plan Amendments; and to approve or withhold approval to allow any demolition, relocation, construction, alteration, remodelling or any other things or act which may materially affect any building, structure or part thereof on the Land.

3.7 Failure is Not Waiver

The failure of either party to require performance by the other party of any obligation under this Agreement at any time shall in no way affect its right thereafter to enforce such obligation, nor shall any such failure be taken or held to be a waiver of the performance of the same or any other obligation under this Agreement at any later time.

3.8 Force Majeure

Notwithstanding anything in this Agreement to the contrary, if the Owner or the Town are *bona fide* delayed in or prevented from performing any obligation arising under this agreement by reason of strikes or other labour disturbances, civil disturbance, material shortage, restrictive government laws, regulations or directives, acts of public enemy, war, riots, sabotage, crime, lightning, earthquake, fire, hurricane, tornado, flood, explosion or other act of God, then the performance of such obligation is excused for so long as such cause exists, and the party so delayed shall be and is entitled, without being in breach of this Agreement, to carry out such obligations within the appropriate time period after the cessation of such cause.

3.9 Binding Law

Any reference herein to any law, by-law, rule, regulation, order or act of any government, governmental body or other regulatory body shall be construed as a reference thereto as amended or re-enacted from time to time or as a reference to any successor thereto.

3.10 Enforcement of Agreement

The Owner covenants and agrees that the facilities, works and matters required to be constructed or provided by this Agreement shall be constructed or provided and maintained by the Owner at its sole risk and

expense, and to the satisfaction of the Town acting reasonably. Furthermore, the Owner covenants and agrees that, upon any failure by it to do any act that is required pursuant to this Agreement, the Town may, in addition to any remedy it may have under this Agreement or generally at law, enter onto the Lands and do the said act or remedy the failure or deficiency at the owner's expense and collect the cost thereof in like manner as municipal taxes as provided for in section 446 of the *Municipal Act, 2001*, S.O. 2001, c. 25.

3.11 Specific Performance

The Owner acknowledges that any breach of this Agreement by the Owner would not be adequately compensated by payment of damages and, accordingly, the Owner admits that specific performance is an appropriate form of remedy in the event of default by the Owner.

3.12 Time of the Essence

Time is of the essence of this Agreement and every part of this Agreement and no extension or variation of this Agreement shall operate as a waiver of this provision, provided that the time for doing or completing of any matter provided for herein may be extended or abridged by an agreement in writing signed by the Town and the Owner or by their respective lawyers who may e specifically authorized in that regard.

3.13 Agreement Binding on Successors and Assigns

This Agreement shall ensure to the benefit of, and be correspondingly binding upon the parties and their respective successors and assigns.

3.14 Schedules

The provisions set out in Schedules "A", "B", "C", "D" are attached to and form part of this Agreement.

3.15 Commencement of Agreement

This Agreement shall commence on the date of execution and delivery of this Agreement by the parties.

IN WITNESS WHEREOF the Owner has executed this agreement the XX day of XXXX, 2021

COMPASS HEIGHTS DEVELOPMENT LTD.

Per: _____
Name:
Title:

c/s

Per: _____
Name:
Title:

We have authority to bind the corporation.

IN WITNESS WHEREOF the Town has executed this agreement the XX day of XXXX, 2021.

THE CORPORATION OF THE
TOWN OF FORT ERIE

Per: _____
Wayne Redkop, Mayor

c/s

Per: _____
Carol Schofield, Town Clerk

We have authority to bind the corporation.

SCHEDULE "A"

LEGAL DESCRIPTION OF LANDS

SCHEDULE “B”

Amending Zoning By-law No. XX-2021

SCHEDULE-"C"

AMENDING BY-LAW SCHEDULE

SCHEDULE "D"

CALCULATION OF SECTION 37 CONTRIBUTION

Scenario A- With both the parcels designated Core Mixed Use and Zoned Core-Mixed Use 1-447. A maximum building height of 4 storey and estimated maximum density of 75 units per hectare, implying 43 residential units an addition to commercial space. 49 combined units

Scenario B- With both the parcels designated Core Mixed Use and Zoned Core-Mixed Use 1-447. A maximum building height of 12 story with the proposed density of 348.8 units per hectare, with 200 dwelling units and 879.9 square metres of retail space. 206 combined units

SCENARIO A- Estimated current Hypothetical Market Value = $1, 565.00

SCENARIO B-- Estimated prospective Hypothetical Market Value= $3,770,000

Cash Contribution calculated based on 4% of Increased valve of land = $150,800 (rounded down) to $150,000.00

Planning and Development Services

Prepared for	Regular Council	**Report No.**	PDS-17-2021
Agenda Date	February 22, 2021	**File No.**	310109

Subject

ANIMAL WELFARE, PROTECTION, AND CONTROL BY-LAW RECOMMENDATION REPORT

Recommendations

THAT Council receives the draft Animal By-law attached as **Appendix "1"** to Report No. PDS-17-2021, and further

THAT Council chooses Option No._____ for the licensing of cats, and further

THAT Council approves the draft Animal By-law attached as **Appendix "1"** to Report No. PDS-17-2021, subject to the revisions required to implement Council's choice of Option No. _____ for the licensing of cats.

Relation to Council's 2018-2022 Corporate Strategic Plan

Priority: N/A
Goal: N/A
Initiative: N/A

List of Stakeholders

Fort Erie Society for the Prevention of Cruelty to Animals
Fort Erie citizens and animal owners

Prepared by:	Submitted by:	Approved by:
Original Signed	*Original Signed*	*Original Signed*
Paul Chudoba, AMP, Dipl.M.A., CPSO Coordinator, By-Law Enforcement	Kira Dolch, MCIP, RPP, CNU-A Director, Planning and Development Services	Tom Kuchyt, CET Chief Administrative Officer

Purpose

To provide a response and recommendations to Council regarding the Town's animal control and related By-laws to be reflective of modern times, providing policies and procedures from the current contractor of animal control services, and an update on the future Animal Control Services Agreement.

Background

The Town has three By-laws which relate to animals. By-law No. 119-97, as amended or replaced, is specific to regulating, restricting, and prohibiting the keeping and running-at-large of dogs only. By-law No. 146-2001, as amended or replaced, regulates and prohibits the keeping of exotic animals. Lastly, By-law 176-2001, as amended or replaced, regulates potentially dangerous dogs and dangerous dogs. The Town does not currently have any by-laws with respect to the standards of care for an animal, harm prevention, and other relevant necessities towards animal health. Animal welfare and protection is now the responsibility of the province under the *Provincial Animal Welfare Service Act, 2019*, S.O. 2019, c.13, (PAWS Act) enacted January 1st, 2020, which replaced the *Ontario Society for the Prevention of Cruelty to Animals Act*, R.S.O. 1990, c. O.36, as it was repealed January 1st, 2020.

At the Regular Council meeting August 24th, 2020, the Municipal Council of the Town of Fort Erie considered Resolution No. 7, directing staff to develop an Animal Rights and Protection By-law. Council also directed staff to work with experts in the field, which include a Doctor of Veterinary Medicine in good standing with the Canadian Veterinary College, and an animal rights lawyer to ensure expert legal advice in advocacy and securement of law. To permit staff to prepare a report with respect to costs, Council considered and approved Resolution No. 7A, which postponed a decision on Resolution No. 7, until October 19th, 2020.

Further to the Regular Council meeting August 24th, 2020, the Municipal Council of the Town of Fort Erie, considered Resolution No. 8, and directed staff to modernize and update the Animal Control By-law to be reflective of all types of animals, both domestic and wild, to ensure the safe harbour, handling, and protection of animals. Council directed staff to integrate the new Animal Rights and Protection By-law once developed, into the Animal Control By-law to be more reflective of modern day realities. To permit staff to prepare a report with respect to costs, Council considered and approved Resolution No. 8A, which postponed a decision on Resolution No. 8, until October 19th, 2020.

Further to the Regular Council meeting August 24th, 2020, the Municipal Council of the Town of Fort Erie, considered and approved Resolution 9, directing staff to examine the current Animal Control Services Agreement, in preparation of the 2022 open bid date, so that changes could be made to include the new Animal Welfare, Protection, and Control By-law, and be rewritten to offer more control for inspection and rights to the Town of Fort Erie, to ensure that processional, ethical, moral care, and control of animals are followed. Council directed staff to conduct a financial analysis and

comparison to ensure that the amount provided in the contract is reflective of the financial burden/expenses to carry out the duties on an annual basis. Council directed staff to request policies and procedures with respect to Animal Control Services, qualifications of those tasked with services, compliance of safe handling, care, and control of animals brought in. Council propounded that the Animal Control Services Agreement be placed on an open bid system in 2022, rather than single sources for competitive advantages and opportunities.

At the Regular Council meeting October 19th, 2020, staff presented Council with report PDS-46-2020. The report identified that animal welfare and protection for most animal species, including those charged with a duty of care to those animals, were currently covered by either Federal or Provincial law, and enforcement agencies were currently in place to address them. The report identified that based on a legal opinion obtained, the Town had jurisdiction to enact a by-law which included animal welfare provisions, and also identified basic obligations on behalf of the Town to continue to provide animal control services. The Municipal Council of the Town of Fort Erie, considered and approved Resolution No. 2, and amended the 2020 General Levy Operating Budget by $30,000 for the purpose of obtaining a legal and veterinarian review of the potential Animal Welfare Protection By-law, and the current Animal Control Services Agreement.

At the Council-in-Committee meeting held November 2nd, 2020, the Municipal Council of the Town of Fort Erie was provided with a memorandum regarding the delegation of the appointment of Municipal Law Enforcement Officers (MLEOs). By-law No. 106-12, passed October 9th, 2012, delegated authority to the Town Clerk to appoint employees of the Fort Erie SPCA when staffing changes occur, as Municipal Law Enforcement Officers, for the purposes of enforcing Town's three animal related By-laws. This appointment is specifically related to a contractor being awarded the contract to administer the Town's animal related By-laws, under the Animal Control Services Agreement. It was clarified that the appointments of Fort Erie SPCA (FESPCA) staff as MLEOs, to facilitate the FESPCA employees in carrying out their contractual duties as Animal Control Officers for the purpose of enforcing the Town's By-laws regulating animals in accordance with the Animal Control Services Agreement. It was further clarified that the Town does not hire or terminate FESPCA employees.

At the Special Council meeting held November 18th, 2020, the Municipal Council of the Town of Fort Erie, considered and approved Resolution No. 8, as amended, postponed from August 24, 2020 (Resolution No. 7), directing staff to identify a practicing lawyer in good standing with the Law Society of Ontario, with a specialization in animal rights and welfare law, and an expert of veterinary medicine in good standing with the Canadian Veterinary College. Council directed staff to engage both professionals in the development and review for Animal Control Services. Council directed staff to modernize and update the animal control by-laws, to be reflective of other animal types both domestic and wild, to ensure safe animal harbour, handling and protection (Resolution No. 8). Council directed staff to provide a draft by-law to Council at the first Council-in-Committee meeting in February 2021. In relation to Resolution No. 9 at the August 24th, 2020, meeting, Council directed staff under Resolution No. 8 at the

November 18th, 2020, meeting, to request a copy of all FESPCA Policies and Procedures as it relates to its contractual obligation of Health, Safety, and Procedural Guidelines, as it applies to employees, facilities, animal intake, impound services, adoption, end of life, dog licensing, and any and all other incidental policies, with the documents being provided to Council be February 5th, 2021.

At the Regular Council meeting on December 14th, 2020, Council directed staff to incorporate the following provisions into a new Animal Control By-law, as part of its scope, and/or policy purpose, definitions, understandings and directives:

1. freedom from hunger, malnutrition and thirst by ready access to fresh water and a diet to maintain full health and vigour;
2. freedom from fear and distress by ensuring conditions and treatment which avoid mental suffering;
3. freedom from physical and thermal discomfort by providing an appropriate environment including shelter and a warm, dry comfortable and clean resting space including the need to be housed with or apart from other animals;
4. freedom from pain, injury, disease and suffering by prevention or rapid diagnosis and treatment; and
5. freedom to express normal patterns of behaviour by providing sufficient space, proper facilities and company including adequate outside space to exercise properly and indoor space to live.

Analysis

Animal Lawyer and Veterinarian

Staff identified a lawyer Jennifer Friedman, who is a member in good standing with the Law Society of Ontario. The animal rights and welfare lawyer is in her eighteenth year of legal practice. For the past 15 years, Ms. Friedman has handled hundreds of animal cases before the courts and tribunals across Canada. In 2012, her submissions to the Ontario Bar Association led to the creation of the province's first section dedicated exclusively to Animal Law. This was the second of its kind in Canada, and she acted as Chair from 2012-2014. In 2016, Ms. Friedman opened her own practice devoted exclusively to Animal Law.

The veterinarian performing a review of the Animal Welfare, Protection, and Control By-law came at the recommendation of Ms. Friedman. Dr. Heinrich, DVM, is a member of the Animal Welfare Committee of the Canadian Veterinary Medical Association, and has published papers including stress and pain related behaviours.

Modernize and update the Animal Control By-law

The modernized and consolidated Animal Control By-law, which is attached to this report as **Appendix "1"** was based on the following criteria:

1) To consolidate all animal related by-laws into one source document

2) Provide enhanced definitions

3) Provide new provisions for:
   a) standards of care
   b) obligation to report animal abuse, hardship, privation, or neglect
   c) pens and enclosures
   d) tethering animals
   e) animals in distress and harm to animals
   f) euthanasia
   g) animal fighting
   h) trapping animals
   i) feral cats
   j) livestock
   k) domestic animal excrement
   l) wildlife
   m) keeping of cats and licensing cats
   n) animal noise
   o) non-compliance to utilize AMPS
   p) seized animals

4) Refine current provisions for:
   a) Potentially Dangerous Dogs and Dangerous Dogs
   b) Muzzle Orders
   c) The Appeal Committee
   d) forfeited animals
   e) kennel care
   f) identification tags
   g) licence appeals
   h) keeping of dogs
   i) exotic animals

5) Map out enforcement and inspection powers for the administration of the By-law

6) Ensure that the By-law had a neutral administrator, so that provisions could be contracted out to any agency if possible.

Five Freedoms

The five freedoms of animals are addressed in various sections of the Animal Welfare, Protection, and Control By-law. Predominantly, the sections referencing standards of care, keeping animals, pens and enclosures, tethers, and traps, have provisions to address the five freedoms for animals.

Animal Fighting, Harm, Distress, and Wild Animals

Provisions were originally included in the draft Animal Welfare, Protection, and Control By-law prohibiting animal fighting, provisions to address harming or causing distress to an animal, and provisions for wild animals including harbouring. The legal opinion received regarding these provisions was that it was "ultra vires", or outside the scope of the municipality, to pass a By-law which included the aforementioned provisions. As such, to address these circumstances, the matters are required to be brought to the attention of an Animal Welfare Inspector under the *Provincial Animal Welfare Service Act, 2019,* S.O. 2019, c.13. A provision was included in the draft By-law requiring a person, including a veterinarian, if it is suspected that an animal is involved in animal fighting, or a person is causing harm or distress to an animal, to bring that information to the attention of an Animal Welfare Inspector. Failure to do so, is an offence under the By-law.

Appointment of MLEOs

The appointment of MLEOs will be based on a successful contractor to administer the new Animal Control Services Agreement, or if need be, Town staff in the absence of a contractor. The appointment process currently is a list of those responsible for enforcing the Town's By-laws are provided to the Clerk of the Town, where the Clerk has the authority to appoint those persons to fulfil their contract mandate. The process has been effective, and there has not been an identified need to change this process.

Cat licensing

In Niagara Region, seven of eleven municipalities licence cats. These municipalities are Welland, Niagara Falls, Wainfleet, Lincoln, Pelham, West Lincoln, and Niagara-on-the-lake. Of those seven, only Welland requires a mandatory licence for cats, and it is $10 for a lifetime licence. The remaining six municipalities offer a $20 licence on a voluntary basis. The majority of municipalities in the Region utilize Docupet, which is a contracted service that collects licence fees, maintains a pet database, and has a 24/7 call centre to assist with matters such as lost/found licenced animals. The only municipalities that are not a part of Docupet are Fort Erie, Niagara-on-the-Lake, and Grimsby. One of the primary purposes of cat licensing is to address animals at large, and with identification tags issued along with a licence, the owner can be identified and the animal returned. Further, it is also possible to address owners who consistently permit their pet to be running-at-large. With respect to the following licensing options, the difference between voluntary and mandatory is that if mandatory, the pet owner may be susceptible to a penalty for failing to licence.

Option #1: No change. No licence required

Option #2: Implement a mandatory one-time licence with no fee. The Town will incur a minor expense to issue a tag

Option #3: Implement a voluntary one-time $20 licensing fee

Option #4: Implement a $20 mandatory annual licensing fee

Option #5: Implement a $20 mandatory one-time licensing fee

Examine and Revise current Animal Control Services Agreement

This portion of the direction provided by Council will be reviewed after the adoption of a new Animal Welfare, Protection, and Control By-law, or updated current animal related By-laws.

Financial/Staffing and Accessibility (AODA) Implications

The Animal Welfare, Protection, and Control By-law is well in excess of what currently exists in Town with respect to animal control and regulation By-laws. As such, it is expected that there will be an increase in the contractual amount tendered. Currently, the Animal Control Services Agreement provides for a monetary compensation of $150,973 until May 31st, 2021, and then will increase to $153,238 after that until May 31st, 2022. In return, the contactor is permitted to retain dog licensing fees. For 2020, it was estimated that approximately $195,000 would be collected in dog licence fees. It is not known what the licensing fee totals for cats will be if adopted. This would mean that the minimum remuneration required before any of the additional responsibilities, would currently be in excess of $345,973 to administer the By-law.

There may not be an agency or contractor who will be able to perform the enforcement aspect of the Animal Welfare, Protection, and Control By-law. With the *OSPCA Act* repealed, and the introduction of the *PAWS Act*, the OSPCA has begun to move away from being an enforcement agency, and is becoming more of a humane society. Aside from the OSPCA, there are no known agencies within Niagara Region who may be able to bid on the contract, and be capable of enforcing the Animal Welfare, Protection, and Control By-law. As a result, there is a possibility that the Town may have to administer the By-law in-house, but may still be able to contract out for shelter services.

Policies Affecting Proposal

By-Law 119-97, as amended, Being a By-law to Regulate, Restrict, and Prohibit the Keeping and Running at Large of Dogs

By-Law 146-2001, as amended, Being a By-law to Regulate and Prohibit the Keeping of Exotic Animals in the Town of Fort Erie

By-Law 176-2001, as amended, Being a By-law to Regulate Dangerous Dogs in the Town of Fort Erie

By-Law 106-12, as amended, Being a By-law to appoint Animal Control Officers of the Town of Fort Erie SPCA as Municipal Law Enforcement Officers for the Town of Fort Erie

By-Law 2-10, as amended, Being a By-law respecting the purchase of Goods, Services, and Construction

Comments from Relevant Departments/Community and Corporate Partners

N/A

Communicating Results

New requirements for cat licensing, if adopted will have to be communicated by the Town through various mediums. Additionally, the Town Poundkeeper will need to be notified of the changes to administer the licences.

Alternatives

Rely on the *Provincial Animal Welfare Services Act, 2019*, and the Animal Welfare Inspectors appointed to enforce that legislation. Only enforce what the Town is obligated to do, which in short is addressing animals running-at-large, and provide a Poundkeeper service.

The municipality can explore the option of retaining pet licensing fees, and utilize a contractor such as Docupet to collect pet licensing fees, and provide follow-ups for expired licences. This may affect the amount required for contracted services such as an Animal Control Services Agreement, but if performed in-house, would assist with the administration of the program.

Conclusion

The new Animal Welfare, Protection, and Control By-law encompasses all animal related Town By-laws into a single source document. It provides Town specific regulations to existing legislation, and acts as a reference guide of roles and responsibilities for a contractor charged with the responsibility of providing Poundkeeper services on behalf of the Town.

With the addition of more definitions, new standards of care including the “five animal freedoms”, more clarity with respect the roles and responsibilities of the appeal committee and the process thereof, neutral language to allow for the appointment of any capable contractor, and the utilization of AMPS with a tiered system, the Town will have a comprehensive document with respect to almost all matters related to animal welfare, protection, and control.

There is a possibility that there might not be a contractor suitable to administer the new Animal Welfare, Protection, and Control By-law. With the introduction of the *PAWS Act*, and its Animal Welfare Inspectors, organizations like the OSPCA, are moving from enforcement, and going towards being a humane society while offering shelter services. As such, the Town may be in a position that it will have to administer enforcement

services in-house including additional costs, and retain a humane society for the purpose of providing shelter services.

A revision of the current Animal Control Services Agreement is not possible at this time, until the adoption the Animal Welfare, Protection, and Control By-law, or similar By-law(s) to modernize and update animal control related Town By-laws, which ultimately will be the foundation for such an agreement.

Attachments

Appendix "1" - Draft Animal Welfare, Protection, and Control By-law

The Municipal Corporation of the Town of Fort Erie

By-law No. XX-2021

Being an Animal Welfare By-law, Governing the Care, Licensing, and Regulating of Dogs, Cats, and Other Animals, and to Repeal By-law Nos. 119-97, 156-97, 23-2000, 82-2001, 146-2001, 176-2001, 81-2003, 32-04, 33-04, 135-10, 58-12, 106-2015, 107-2015, 74-2018, and 13-20

Whereas the Municipal Council ("Council") of The Corporation of the Town of Fort Erie (the "Town") enacted By-law No. 119-97 on July 21, 1997, as amended, to regulate and restrict the keeping of dogs, and prohibit the running-at-large of dogs in the Town; and

Whereas Council enacted By-law No. 146-2001 on August 20, 2001, as amended, to regulate and prohibit the keeping of exotic animals in the Town; and

Whereas Council enacted By-law No. 176-2001 on September 24, 2001, as amended, to regulate dangerous dogs in the Town; and

Whereas at the Special Council meeting held on November 18th, 2020, Council considered and approved Resolution No. 8, as amended, postponed from August 24, 2020, to create a comprehensive animal by-law in respect to all animal species to ensure safe animal harbour, handling and protection; and

Whereas Subsection 8(3) of the *Municipal Act, 2001,* S.O. 2001, c. 25 grants municipalities broad powers to govern, regulate, and licence in accordance with Section 11 of the *Municipal Act, 2001;* and

Whereas Subsection 10(2) of the *Municipal Act, 2001* authorizes municipalities to enact by-laws in respect to animals; and

Whereas Subsections 11(2) and 11(3) of the *Municipal Act, 2001*authorizes lower tier municipalities to enact by-laws respecting the health, safety and well-being of persons, and the protection of persons and property; and

DRAFT

Whereas Subsection 103(1) of the *Municipal Act, 2001* confers the power upon municipalities to enact by-laws governing the seizure and impoundment of animals being at large or trespassing, and the subsequent disposition of impounded animals subject to conditions; and

Whereas Section 105 of the *Municipal Act, 2001* requires municipalities to convene for a Hearing, subject to prescribed conditions, if an animal owner is aggrieved by a muzzling order; and

Whereas Section 425 of the *Municipal Act, 2001* authorizes a municipality to enact by-laws making it an offence to contravene a by-law; and

Whereas Subsection 434.1 of the *Municipal Act, 2001* confers the power upon municipalities to enact by-laws to impose administrative monetary penalties for failure to comply with by-law provisions; and

Whereas the *Municipal Act, 2001* further authorizes the Town to enact by-laws to provide for, without limitation, delegation of its authority, imposition of fees, entry on land, inspections, and appeals; and

Whereas the *Animals For Research Act,* R.S.O. 1990, c. A.22 generally provides for the redemption and destruction of impounded animals; and

Whereas the *Pounds Act,* R.S.O. 1990, c. P.17 generally provides for the appointment of a Poundkeeper, and for the recovery of expenses associated with impounding animals running-at-large; and

Whereas the *Dog Owners Liability Act*, R.S.O. 1990, c. D. 16 generally provides for owner liability for dog attacks or bites; and

Whereas the *Provincial Animal Welfare Services Act*, S.O. 2019, c. 13 generally provides for greater animal protection and humane treatment of animals; and

Whereas Council approved the initiative to enact a comprehensive new animal by-law;

Now therefore the Municipal Council of The Corporation of the Town of Fort Erie enacts as follows:

DRAFT

TABLE OF CONTENTS

PART I:

1. Short Title 5
2. Applicability and Scope 5
3. Definitions 6
4. Interpretation 12

PART II:

5. Licensing of Cats and Dogs 12
6. Identification Tags 14
7. Kennels 15

PART III:

8. Keeping of Cats and Dogs 19
9. Animals Running-at-Large 20
10. Animal Impoundment 21

PART IV:

11. Basic Standards of Care 23
12. Standards of Care for Animals Living Outdoors 24
13. Standards of Care regarding Unsanitary Conditions 25
14. Euthanasia 25

PART V:

15. Pens and Enclosures 26
16. Tethers 26
17. Unattended Animals in Vehicles 27
18. Animal Noise 27

PART VI:

19. Potentially Dangerous Dogs and Dangerous Dogs 28

PART VII:

20. Animal Traps 31
21. Feral Cats 32
22. Livestock 32
23. Exotic Animals 33

DRAFT

PART VIII:

24. Licence Suspensions, Refusals, and Revocations....34
25. Appeals....35
26. Service....37

PART IX:

27. Enforcement and Right of Access....37

PART X:

28. Penalties....39
29. Administrative Monetary Penalties....39
30. Collection of Unpaid Fines....40

PART XI:

31. Modifications....40
32. Severability....40
33. Immunity....40
34. Repeal....41
35. Force and Effect....41

SCHEDULES:

1. Schedule "A": Animal Species Classifications....42
2. Schedule "B": Exotic Animal Exceptions....44
3. Schedule "C": Administrative Monetary Penalties....45

DRAFT

1. SHORT TITLE

This By-law may be referred to as the "Animal By-law".

2. APPLICABILITY AND SCOPE

(1) The provisions of this By-law apply to the entire geographic area and boundaries of the Town.

(2) If there is a conflict between a provision of this By-law and any other by-law of the Town, or a provincial or federal statute or regulation, the one that is most restrictive prevails.

(3) The provisions of this By-law do not apply to:

(a) bees;

(b) any display held by an agricultural or horticultural organization incorporated under the *Agricultural and Horticultural Organizations Act*, R.S.O. 1990, c.A.9.;

(c) the lands and premises being utilized as a zoo, and lawfully permitted to operate as such;

(d) an animal hospital or clinic lawfully operated and supervised by a veterinarian.

(e) an Activity permitted under the *Fish and Wildlife Conservation Act,* S.O. 1997,

(f) an Activity regarding agricultural animal care, management or husbandry carried on in accordance with:

(i) any standards of care or administrative requirements that expressly provide that they apply to that Activity; or

(ii) if no standards of care or administrative requirements expressly provide that they apply to that Activity, the reasonable and generally accepted practices of agricultural animal care, management or husbandry.

3. DEFINITIONS:

For the purpose of this By-law:

(a) "accredited veterinary facility" means a veterinary facility as defined in the *Veterinarians Act,* R.S.O. 1990, c.V.3, and is accredited under the *Veterinarians Act.*

(b) “agricultural operation” means a business operated outside the Town’s Urban Boundary in an agriculturally zoned area for the principal purposes of producing and processing agricultural products and operating abattoirs, and which involves commitment of finances, time, size, and scope and with a reasonable expectation of profit.

(c) “animal” means any member of the animal kingdom other than human.

(d) “Animal Control Officer” means a person or a corporation, including said corporation’s employees, agents, and representatives, that has entered into a contract with the Town for the control and regulation of animals within the Town, including Poundkeeper services, or who are employed by the Town for the control and regulation of animals within the Town, and includes a Municipal Law Enforcement Officer, a police officer, and any other party contracted by the Town to provide such services.

(e) “appeal” means an application by an individual or entity aggrieved by conduct initiated in accordance with this By-law.

(f) “attack(ed)” means physical contact, other than friendly or accidental contact, by an animal that results in bleeding, bone breakage, bruising, a scratch or a sprain to a person or an animal.

(g) “bite” means piercing or puncturing of skin inflicted by the tooth or teeth of an animal.

(h) “business day” means a weekday, excluding a day that is a holiday recognized by the Town.

(i) "cat" means a domesticated male or female feline of any breed or crossbreed, other than a Savannah cat, of the species Felis catus.

(j) “Clerk” means the Clerk of the Town or his or her designate.

(k) “commercial kennel” means a premise of an establishment where more than two (2) dogs are boarded, bred, kept or trained for remuneration, and includes a duly licensed pet daycare and similar in-home pet boarding facility.

(l) “control” means the ability to manage, direct, restrict, and restrain the movements of an animal at all times.

(m) “Council” means Town Council.

(n) “Committee” means a Committee consisting of three (3) members of Council convened to hear an Appeal under this By-law known as the “Dangerous Dogs Appeals Committee”.

(o) "critical distress" means distress that requires immediate intervention to prevent serious injury and/or to preserve life.

(p) "dangerous dog" means any dog, other than a police work dog or guard dog, who has, in the absence of any mitigating factor, attacked, bitten, or caused injury or death to a person or animal; and as more particularly described in Section 19 herein.

(q) "dog" means any male or female domesticated canine of any breed or crossbreed, other than wolf-dogs or coy-dogs, of the species Canis familiaris, but does not include a police work dog, a guard dog, or a guide dog.

(r) "dispose of" means burial or cremation.

(s) "distress" means the state of being:

(i) in need of proper care, water, food or shelter; or

(ii) injured, sick, in pain or suffering; or

(iii) abused or subject to undue physical or psychological hardship, privation or neglect.

(t) "dwelling" means a place occupied by at least one (1) person as an independent home or residence with a private entrance, which contains food preparation and sanitary facilities for the exclusive use of the occupant/s thereof.

(u) "exotic animal" means any animal or class of animals enumerated in Schedule "A" herein.

(v) "feral cat" means any cat found in Town with no owner and which cat is not socialized and exhibits fear and resistance to humans.

(w) "guard dog" means any dog trained and duly licenced to inflict injury, maim, immobilize or display a threatening or aggressive disposition for security purposes on licensed industrial or commercial use lands.

(x) "guide dog" means a dog duly designated in the *Accessibility for Ontarians with Disabilities Act,* S.O. 2005, c.11 and *Blind Persons Rights Act*, R.S.O. 1990, c.B.7, as amended.

(y) "Hearing" means an administrative proceeding held pursuant to the *Statutory Powers and Procedures Act* R.S.O. 1990 c. S. 22, and more particularly described in Section 27 herein.

(z) "hunting" means lying and waiting for, searching for, being on the trail of, pursuing, chasing or shooting at wildlife, whether or not the wildlife is killed, injured, captured or harassed and does not include trapping.

DRAFT

(aa) "identification tag" means a disc or other shape of metal or plastic issued and dispensed by the Town or Poundkeeper further to an approved cat or dog license application and registration.

(bb) "impound" means to confiscate, confine, hold or take possession.

(cc) "keep" means to have temporary or permanent control or possession of an animal, and the word "harbour" has a similar meaning.

(dd) "kennel" means a purebred kennel or commercial kennel with at least two (2) dogs over sixteen (16) weeks of age, being boarded, bred, kept or trained, but excludes:

(i) a veterinary clinic or veterinary hospital;

(ii) a public pound or animal shelter used by the Town for impounding animals;

(iii) any premises duly licensed under any statute of the Province of Ontario or the Government of Canada, which permits the keeping of dogs and other animals under certain conditions; or

(iv) a licensed pet shop.

(ee) "leash" means a tether, rope, chain, line or similar device for leading or restraining an animal and shall be of sufficient strength and design to allow a person to restrain and control the animal.

(ff) "Licence Agent" means the Town or any employee thereof, or such person or organization as is authorized to act on behalf of the Town, to maintain, enforce, and administer this By-law.

(gg) "licence fee" means a fee imposed upon the owner of a dog or kennel in accordance with the Town's Fees and Charges By-law No. 40-09, as amended or replaced.

(hh) "livestock" means any domestic or farmed animal, including, but not limited to, poultry, cattle, swine, horses, mink or other furbearing animals, rabbits, sheep, goats and other types of animals listed in the Agricultural Code of Practice of the Ontario Ministry of Agriculture, Food and Rural Affairs.

(ii) "Manager" means the Director, Planning and Development Services or his or her designate, or a delegate authorized by Council to act on behalf of the Town, to maintain, enforce, and administer this By-law.

(jj) "menace" means intimidating, aggressive, threatening demeanour toward people or animals without any mitigating factor/s.

(kk) "microchip" means an approved Canadian standard encoded identification device implanted into an animal, which contains a unique code that permits or facilitates access to owner information, including the name and address of the owner of the animal.

(ll) "mitigating factor" means a consideration that excuses aggressive behaviour of a dog, and as more particularly described in Section 19 herein.

(mm) "Municipal Law Enforcement Officer" means a person duly appointed by the Town to enforce the provisions of this By-law, and includes any police officer appointed pursuant to the *Police Services Act,* R.S.O. 1990, c. P.15.

(nn) "minor owner or custodian" means if the owner or custodian of an animal is a minor, the owner or custodian of the animal is deemed to be the minor's parent or guardian.

(oo) "most humane course of action" means euthanasia of an animal if:

(i) immediate veterinary treatment cannot prolong the animal's life; or

(ii) prolonging the animal's life would result in undue suffering for the animal.

(pp) "muzzle" means a strong and well-fitted covering device that securely fastens over the dog's mouth to prevent the dog from biting but does not interfere with the dog's vision or ability to breath, drink, and pant.

(qq) "neutered" means a male dog with its generative organs removed or vasectomized.

(rr) "officer" means an Animal Control Officer, a Municipal Law Enforcement Officer, or police officer.

(ss) "owner" means:

(i) a person who has control of an animal;
(ii) a person who owns, keeps, possesses or harbours an animal;
(iii) a person who owns a premise; or
(iv) the parent or guardian of the minor owner of an animal.

(tt) "person" includes an owner, individual, partnership, association, firm or corporation, business entity or club, or any other incorporated or unincorporated group or organization to whom the context can apply in accordance with the *Interpretation Act,* R.S.O. 1985, c.1-21.

(uu) "pet shop" means an establishment engaged in the retail sale of animals excluding a kennel.

(vv) "Pit Bull" dog includes:

(i) a pit bull terrier;
(ii) a Staffordshire bull terrier;
(iii) an American Staffordshire bull terrier;
(iv) an American pit bull terrier;
(v) a dog for which a veterinarian attests has an appearance and physical characteristics that are substantially similar to the dog breeds referred to in (a)-

(d) above.

(ww) "place" includes any land, building, vehicle or vessel.

(xx) "point of reception" means any point on a premise where the barking, calling, whining or other similar persistent sound originating from other than that premise is received.

(yy) "police work dog" means a dog trained and duly licensed for and actually engaged in law enforcement for the Niagara Regional Police or other law enforcement agency.

(zz) "potentially dangerous dog" means a dog that, in the absence of any mitigating factor, chases or approaches any domestic animal or person, anywhere other than on the property of its owner, in a menacing fashion or apparent attitude of attack, including but not limited to, behaviour such as growling or snarling; and as more particularly described in Section 19 herein.

(aaa) "pound" means such premises and facilities designated by the Town further to a contract with the Town for the detention, maintenance or disposal of animals on behalf of the Town.

(bbb) "Poundkeeper" means the Town or any employee thereof, or such person or organization as is appointed by Council to act on behalf of the Town, to maintain, enforce, and administer this By-law (elaborate).

(ccc) "premise" means a vacant or occupied lot, building or a part thereof, including a dwelling unit, and any land appurtenant.

(ddd) "prescribed" means a provision or requirement according to this By-law.

(eee) "protective care" means the temporary, time-limited keeping of an animal by the Town as a result of an owner eviction, incarceration, fire, or medical emergency.

(fff) "Public Health Inspector" means a public health professional with Niagara Region Public Health, appointed under the *Health Protection and Promotion Act,* R.S.O. 1990, c.H.7.

(ggg) "purebred kennel" means a premise where more than two (2) purebred dogs, which are officially recognized breeds by the Canadian Kennel Club or other international registry, and shall have the same meaning as a "commercial kennel".

(hhh) "redemption period" means the period of time within which the animal owner has the right to redeem an impounded animal subject to the satisfaction of conditions.

DRAFT

(iii) "Rehabilitation Centre" means a facility established for the care and treatment of injured, sick or orphaned animals, with the objective of restoring the animals to their former capacity or function and then returning and releasing them to their natural habitat.

(jjj) "residential" means any property zoned as such within the current applicable Zoning By-law and shall include all lands within the Municipal Boundary, Neighbourhood Boundary, Urban Boundary, Hamlet Boundary and Secondary Plan Schedule as identified and designated in the Town Official Plan.

(kkk) "restrained" (in relation to a potentially dangerous dog or a dangerous dog), means being kept inside a premise in an enclosed six (6) sided pen of sufficient dimension and strength to be humane and secure to prevent a dog from coming in contact with or making a real and substantial threat of attack on a person other than the owner of the dog, or invitee of the owner, and includes keeping such dog securely on a leash of not more than one (1) meter in length when outside of such pen.

(lll) "restricted pit bull" means a pit bull owned by an Ontario resident on August 29, 2005 or born by November 30, 2005, and more particularly described in the *Dog Owners' Liability Act*.

(mmm) "running-at-large" means to be found in any place other than the premises of the owner of the dog, not under the control of any person, and where there is no consent to be in that place.

(nnn) "sell" means offer for sale or adoption, expose for sale of adoption.

(ooo) "service animal" means:

(i) the animal is required by a person with a disability; and

(ii) the person has documentation from one (1) of the regulated health professionals enumerated in the *Accessibility for Ontarians with Disabilities Act,* S.O. 2005, c.11 confirming the person requires the animal for reasons relating to their disability:

(ppp) "spayed" means a female dog whose ovaries and/or uterus have been removed.

(qqq) "Standard of Care" means a Standard of Care prescribed by this By-law.

(rrr) "sterilization" means to spay or neuter a cat or dog.

(sss) "tag" means a method of identifying a licensed dog or cat.

(ttt) "tether" means a rope, chain or similar device, attached to a fixed point, used for restraining an animal that prevents an animal from moving away from a localized area.

(uuu) "Town" means The Municipal Corporation of the Town of Fort Erie.

(vvv) "trap, neuter, return program (TNR)" means to trap, sterilize, and attempt to return feral cats to locations in which they were found.

(www) "unsanitary" means the accumulation of urine or fecal matter, odour, insect infestation, or rodent attractants that may endanger animal or human health.

(xxx) "veterinarian" means a person licensed as a veterinarian by the College of Veterinarians of Ontario.

4. INTERPRETATION

The requirements of this By-law are in addition to the requirements contained in any other applicable by-laws of the Town or applicable provincial or federal statutes or regulations.

PART II:

5. LICENSING OF CATS AND DOGS

(1) Every owner whose cat or dog is aged sixteen (16) weeks or older shall make application for a licence on the prescribed form within ten (10) days of the date the animal comes into his or her possession.

(2) Despite Subsection 5(1), no licence shall be required for a dog being temporarily kept at a kennel in Town, or a private residence where there is no remuneration for keeping the dog, if the dog, when not being kept at the kennel or private residence, is kept at premises located outside of the Town.

(3) Every owner of a dog or cat applying for a licence shall submit to the Poundkeeper a completed application together with the prescribed licence fee pursuant to the Town's Fees and Charges By-law No. 40-09, as amended or replaced.

(4) The licence application shall include the following, as applicable:

(a) the name, address, telephone number, and e-mail address of the owner;

(b) the name, breed, colour and sex of the dog or cat;

(c) the address of the premises where the dog or cat is to be kept in Town;

(d) veterinary proof of a current rabies vaccination;

(e) veterinary proof that the animal has been sterilized as applicable;

DRAFT

(f) microchip identification;

(g) if the dog is a pit bull, proof satisfactory to the Poundkeeper that the dog is a restricted pit bull;

(h) whether the dog is attack trained, a guide dog, a guard dog, or a service dog;

(i) the names, addresses and telephone numbers of up to three (3) alternate persons who may be contacted in the case of animal impoundment;

(j) whether the dog is designated as a "dangerous dog";

(k) whether the dog is designated as a "potentially dangerous dog";

(l) whether the dog will be kept in a kennel;

(m) acquisition information, including country of origin if foreign; and

(n) such additional information as may be reasonably requested by the Poundkeeper.

(5) The Licence Agent is authorized to issue licences only to applicants.

(6) Upon issuance of a licence, the owner shall be furnished with an identification tag.

(7) The Licence Agent may issue up to three (3) licences per applicant to dogs being legitimately used as guard dogs.

(8) The Licence Agent shall maintain a current record of every dog or cat registered pursuant to this By-law, which includes:

(a) the date of licence issuance or renewal;
(b) the name, address, telephone number, and email address of the owner;
(c) the description of the animal;
(d) the registration number; and
(e) the fee paid.

(9) Failure to provide a rabies certificate except for a dog or cat with immune-mediated disease, shall constitute an offence under this By-law and, in addition to any other penalty or action provided herein, the Poundkeeper shall immediately report this information to Niagara Region Public Health.

(10) An application for a licence for a prohibited pit bull shall not be processed, and will be returned to an applicant.

(11) Every licence is valid for the calendar year in which it is issued, and automatically expires on December 31 of each year.

(12) The Poundkeeper shall ensure annual renewal applications are available to the public on November 1. Every owner shall complete the licence renewal on or before January 1.

(13) All renewal applications received after January 1 of each year shall be subject to the prescribed late payment fee, in addition to the prescribed licence fee, as set out in the Town's Fees and Charges By-law No. 40-09, as amended or replaced.

(14) In the absence of updated information indicated on the renewal application, every person who submits a renewal application acknowledges that the information provided on the original application is still current.

(15) Every owner of a dog or cat shall notify the Poundkeeper within ten (10) days of any change in:

(a) the name, address, telephone number, or e-mail address of the owner of the dog or cat;
(b) the address of the premises where the dog or cat is being kept by a new owner; or
(c) the ownership of the dog or cat.

(16) Failure to notify the Poundkeeper of ownership changes in accordance with Subsection 5(15) may lead to the cancellation of the licence.

(17) The Poundkeeper may revoke any cat or dog licence issued in error.

(18) Cat and dog licences are not transferable.

(19) Despite any other provision in this By-law, there shall be no licence fee payable to the Town for a duly licensed police animal, guide dog, or service animal.

6. IDENTIFICATION TAGS

(1) Upon approval of a cat or dog licence application or renewal application (including a police animal, guide dog, or service animal), an identification tag shall be issued to the owner of the dog or cat.

(2) Identification tags shall be sequentially numbered and indicate the year of issuance. The Poundkeeper shall keep a record of each identification tag issued, including the serial number of the identification tag, and the name, address and telephone number of the owner of the dog or cat.

(3) Every owner shall ensure that the current identification tag is securely attached to their dog or cat at all times;

(a) Subsection 6(3) does not apply to an owner of a dog when such dog is actively participating in a sanctioned dog show, provided that the dog can be identified

by another means such as a tattoo or microchip and such identification has already been provided to the Poundkeeper.

(b) Subsection 6(3) does not apply to an owner of a dog when such dog is being lawfully used for hunting provided that the owner has the identification tag on his or her person at all times.

(4) The Poundkeeper shall provide the owner of a "potentially dangerous dog", "dangerous dog" or "attack trained dog" with an identification tag of a distinct colour differentiating them from other dogs.

(5) If an identification tag is lost, damaged or destroyed, an owner of a cat or dog shall immediately apply for a replacement identification tag by submitting to the Poundkeeper a completed replacement tag application, together with the prescribed identification tag replacement fee as set out in the Town's Fees and Charges By-law No. 40-09, as amended or replaced.

(6) Upon the death of a licensed dog or cat, the owner may transfer the identification tag to a new dog at no additional charge provided the owner submits to the Poundkeeper an application for the new dog or cat.

(7) Identification tags issued by another municipality are not recognized by the Town, and are not transferable.

7. KENNELS

Licensing

(1) Every owner or operator of a kennel shall make application for a kennel licence on the prescribed form.

(2) Every applicant for a kennel licence shall submit to the Licence Agent a completed application together with the prescribed licence fee pursuant to the Town's Fees and Charges By-law No. 40-09, as amended or replaced.

(3) The kennel licence application shall include the following, as applicable:

(a) the name, address, telephone number, and e-mail address of the applicant;

(b) the address of the kennel;

(c) the maximum number of dogs at the kennel, excluding any dogs sixteen (16) weeks of age or under;

(d) if the application is for a new kennel, a detailed drawing of the premises showing the location of the kennel in relation to the dwelling unit, neighbouring dwelling, dog runs, fencing, and other buildings on the premises;

(e) if the applicant is not the owner of the lands, written permission from the registered owner of the lands where the kennel is located, confirming that such registered owner permits the kennel use; and

(f) such additional information as may be required by the Poundkeeper.

(4) In addition to satisfaction of Subsections 7(1) to 7(3), the Licence Agent shall only issue or renew a kennel licence further to a satisfactory inspection performed by the Licence Agent and/or Poundkeeper, including:

(a) certification that the kennel meets the standards and requirements of the Town and the Niagara Regional Health Department;

(b) proof of compliance with the Town's Comprehensive Zoning By-law No. 129-90, as amended or replaced, and

(c) proof of adherence to all by-laws of the Town and the *Building Code Act*, S.O. 1992, c. 23 pertaining to, without limitation, construction and kennel maintenance.

(5) The Licence Agent is only authorized to issue kennel licences to applicants.

(6) A kennel licence is valid for the calendar year in which it is issued, and automatically expires on December 31 of each year.

(7) The Licence Agent shall ensure annual kennel licence renewal applications are available to the public on November 1. Every owner or operator shall complete the licence renewal on or before January 1.

(8) All kennel licence renewal applications received after January 1 of each year shall be subject to the prescribed late payment fee, in addition to the prescribed licence fee, as set out in the Town's Fees and Charges By-law No. 40-09, as amended or replaced.

(9) In the absence of updated information indicated on the kennel licence renewal application, every applicant for a kennel licence acknowledges that the information provided on the original application is still current.

(10) Failure to notify the Licence Agent of ownership changes in accordance with Subsection 7(9) may lead to the cancellation of the licence.

(11) The Licence Agent may revoke any kennel licence issued in error.

(12) Kennel licences are not transferable.

Kennel Licence Numbers

(13) Upon approval of a kennel licence application or renewal application, a kennel licence number shall be issued to the owner or kennel operator.

(14) Kennel licence numbers shall be sequentially numbered and indicate the year of issuance. The Licence Agent shall keep a record of each kennel licence number issued, including the licence number, and the name, address, telephone number and e-mail address of the applicant.

(15) Kennel licence numbers issued by another municipality are not recognized by the Town, and are not transferable.

Kennel Operations

(16) Every owner and operator of a kennel shall ensure that:

(a) all dogs are adequately fenced or caged to prevent running-at-large;

(b) all dogs are kept in cages of adequate size to allow the animal to extend their legs, stand, sit, turn around, and lie down in a fully extended position, in accordance with the following provisions:

Minimum primary enclosure space requirements:

Height of the dog measured at the shoulder of the dog (cm)	Area (m2)	Width (m)	Height (m)
70 or greater	15	2.40	1.80
40 to 70	10	1.80	1.80
20 to 40	6	1.40	1.20
5 to 20	4	1	1.20

Minimum primary enclosure space requirements apply to the keeping of one adult dog. Dams and their puppies up to eight weeks of age are provided with an additional space of 10% per puppy. If two or more adult dogs are kept in one enclosure, the minimum dimensions for the enclosure specifed are increased by 1.5 square metres for each dog kept in the enclosure.

(c) all dogs must be provided with daily physical activity out of a cage;

(d) all dogs are fed and watered regularly;

(e) all dogs are kept in a sanitary environment free from vermin and disease;

(f) all floors are constructed using impermeable materials;

(g) all cages are constructed of metal and/or wire with impermeable floors;

(h) all droppings, soiled bedding and waste from which odour might arise are promptly removed;

(i) all cages and floors are thoroughly cleaned at least once (1) per day;

(j) electric lighting illuminates the premises;

(k) windows offer suitable ventilation;

(l) a heating system adequately heats the premises;

(m) a cooling system adequately cools the premises;

(n) hot and cold potable running water is available at all times;

(o) a sanitary food preparation and storage area is on the premises;

(p) the kennel does not become a nuisance by reason of odour, noise from barking or otherwise to a proximate residentially used property;

(q) maintain an environment in which the average sound level is less than 85 decibels; and

(r) the perimeter of the dog run shall be enclosed by a fence, having a minimum height of two (2) meters, and shall be of closed board construction to act as a visual barrier or other natural visual barrier or construction around the dog run or of closed construction if the dog run has or may become a nuisance, and to be approved by the Poundkeeper.

(17) The fence of a dog run of a licensed kennel owner, which was approved before this By-law took effect is deemed to comply with Clause 7(16)(p) provided it does not conflict with Town Fence By-law No. 70-2013, as amended or replaced.

(18) Every owner or operator of a kennel shall maintain a log of all dogs on the premises, including the name and address of the dog owner or custodian. Such log shall be available for review during an inspection by a Licence Agent, Animal Control Officer, Manager, or Municipal Law Enforcement Officer.

(19) Every owner or operator who holds a kennel licence shall not admit a dog into the kennel unless veterinary proof of current rabies immunization is produced, or veterinary proof is provided that a dog cannot be vaccinated due to a medical condition.

(20) If a veterinarian confirms that a kennel has an outbreak of distemper, hepatitis, rabies, parvo-virus, or any infectious or contagious disease, the kennel shall be closed forthwith and the licence shall be temporarily suspended by the Licence Agent, Poundkeeper, Public Health Inspector, or such other person as may be appointed by Council.

(21) Further to any closure and/or licence suspension imposed pursuant to Subsection 7(5), the kennel may reopen and have its licence reinstated by the Licence Agent, the Poundkeeper, Municipal Law Enforcement Officer, Public Health Inspector, or

such other person as may be appointed by Council only upon a written report from a veterinarian that the potential danger of disease transmission has subsided.

(22) Every owner or operator of a kennel shall permit the Licence Agent, Poundkeeper, Municipal Law Enforcement Officer, Animal Control Officer, Manager, Chief Building Official or designate, or such other person as may be appointed by Council, to enter and inspect the Kennel at all reasonable times, upon production of proper identification, for the purpose of determining compliance with this By-law.

(23) If a kennel deviates from the minimum standards pursuant to this By-law or the Town's Property Standards By-law No. 186-08, as amended or replaced, the Lot Maintenance By-law No. 92-2019, as amended or replaced, or any other applicable law, the Licence Agent, Municipal Law Enforcement Officer, Manager, or designate may revoke the kennel licence, and seize and impound all animals, until such time as the Manager or designate is satisfied that the kennel has come into compliance.

(24) Every owner or operator of a kennel shall have a right to appeal any licence suspension, refusal, or revocation.

PART III:

8. KEEPING OF CATS AND DOGS

(1) Except as otherwise permitted, no person shall own, possess, or harbour more than three (3) dogs in any one (1) household or on any premises irrespective of the ownership of the dogs.

(2) Except as otherwise permitted, no person shall own, possess, or harbour more than six (6) cats in any one (1) household or on any premises irrespective of the ownership of the cats.

(3) No person shall own, possess or harbor a dog or cat unless a licence for the dog or cat has been issued under this By-law.

(4) No person shall breed or offer for sale dogs without a kennel licence, rescue foster dog licence, or a pet shop licence.

(5) No person shall possess or harbour a rescue foster dog without a licence.

(6) Exceptions to Subsection 8(1) are as follows:

(a) Subsection 8(1) does not apply to any person keeping a licensed kennel of dogs in accordance with this By-law;

(b) The maximum provided for in Subsection 8(1) may be exceeded for the purpose of fostering rescue dogs on agricultural property subject to the following:

(i) completion of the prescribed application form accompanied by written documentation from a bona-fide registered not-for-profit animal rescue organization registered with Canada Revenue Agency attesting to the suitability of the foster family applicant;
(ii) payment of the prescribed rescue foster dog licence fee for up to five (5) dogs pursuant to the Town's Fees and Charges By-law No. 40-09, as amended or replaced.
(iii) for agricultural property: a minimum of five (5) acres of land;
(iv) up to five (5) rescue foster dogs on agricultural property and up to three (3) rescue foster dogs on non-agricultural property in addition to the prescribed three (3) dog limit for a maximum period of twelve (12) consecutive months;
(v) foster dog licences and identification tags are transferable from adopted dogs to new foster dogs;
(vi) immediate written notification to the Poundkeeper if a rescue foster dog gives birth while in the foster home; and
(vii) the foster family shall wean and adopt out all puppies within eight (8) to ten (10) weeks of birth and provide written proof of adoption to the Poundkeeper.

(7) No person shall permit a dog to be on or in any cemetery, public beach, or park within the Town, except for the following parks: Lions Sugarbowl Park, Battle of Ridgeway Park, and The Friendship Trail.

9. ANIMALS RUNNING-AT-LARGE

(1) No animal owner shall allow, permit or cause that animal to be running-at-large in the Town.

(2) Every owner of a dog, and every person who has a dog under care, custody or control, shall restrain the dog on a leash measuring no more than six (6) feet, when the dog is at every place other than:

(a) on the property of the owner; or
(b) on the property of any other person with consent of that person.

(3) No person shall permit a dog to be in any public park described in Subsection 8(7) except on a leash measuring no more than six (6) feet and only on the grassy areas of said parks.

(4) A person may permit a licensed dog to be running-at-large in an off-leash dog area only in a place referred to in Subsection 8(7), except if the dog is required to be muzzled pursuant to this By-law and/or the *Dog Owners' Liability Act*, as amended or replaced.

(5) Any animal found running-at-large may be captured and impounded by an Animal Control Officer, Manager, Municipal Law Enforcement Officer, or police officer.

10. ANIMAL IMPOUNDMENT

(1) If an Animal Control Officer, Manager, Municipal Law Enforcement Officer, or police officer captures or impounds an animal running-at-large, that official may at his or her sole discretion:

(a) deliver the animal to the Poundkeeper;
(b) release the animal to its owner; or
(c) euthanize the animal if the animal is injured and it is the most humane course of action, and the owner cannot be found based on the following criteria:

i. Bringing to a veterinarian to determine if the state of disease or injury means euthanasia is the most humane course of action is not practicable or would cause further unnecessary suffering to the animal; and
ii. The Animal Control Officer, Manger, Municipal Law Enforcement Officer, or police officer performing euthanasia are trained by a veterinarian in the methods appropriate for the particular species.

(2) If a Town resident impounds an animal running-at-large, the resident shall notify the Clerk and arrange for delivery to or pick-up from the Poundkeeper within two (2) days.

(3) The Poundkeeper shall keep a record of every animal impounded, including:

(a) the date of impoundment;
(b) a description of the animal;
(c) the particulars of the identification tag for the animal, if applicable;
(d) the date disposed of; and
(e) the nature of the disposition made with respect to the animal.

(4) If an animal is impounded for running-at-large, the owner of the animal shall pay to the Poundkeeper reimbursement of its expenses with respect to the animal including:

(a) the prescribed redemption fees for the animal being at large and impounded pursuant to the Town's Fees Charges By-law No. 40-09, as amended or replaced;

(b) any additional costs incurred by the Town as a result of impoundment, including fees from a veterinarian or a specialized animal handler; and
(c) costs for having the animal sterilized or implanted with a microchip.

(5) Every owner shall retrieve the impounded animal from the Poundkeeper within four (4) days of the date of impoundment, excluding the day of impoundment, pound closures, and any statutory holidays.

(6) If an owner seeks to secure the release of a dog from the Poundkeeper, the owner shall:

(a) provide proof of the dog's current licence; or
(b) obtain a current licence before the dog is released; and
(c) pay the prescribed impound fees pursuant to the Town's Fees Charges By-law No. 40-09, as amended or replaced, and any other applicable damages, fines and expenses.

(7) If an animal is not claimed by its owner within the prescribed redemption period, the Poundkeeper is deemed to be the owner and may sell, dispose of, or have a veterinarian or an authorized person who is trained by a veterinarian in euthanasia to euthanize the unclaimed animal.

(8) Notwithstanding Subsection 10(7), if an animal bears identification, a microchip or an identification tag, the Poundkeeper shall make at least one (1) reasonable attempt to contact the owner prior to selling or otherwise disposing of the animal.

(9) Upon becoming entitled to sell or dispose of an animal, the Poundkeeper may, in his or her sole discretion, arrange to have the animal sterilized and/or identified by means of a microchip, and the cost of these services shall be added to the costs recoverable from the owner pursuant to Subsection 10(4).

(10) If a dog has been impounded and it is alleged that the dog bit or attacked a person or domestic animal and proceedings have been commenced against the owner of the dog under the *Dog Owners' Liability Act*, the Poundkeeper shall hold the dog pending the disposition of the matter. The Poundkeeper may only release the dog in accordance with a decision made under the *Dog Owners' Liability Act*. In such circumstances, the owner of the dog shall pay the costs set out in this By-law for the time the dog has been impounded regardless of whether the dog is returned to the owner.

(a) Every effort should be made to ensure the dog does not experience undue suffering while being held. In accordance with ensuring all basic standards of care are provided, each dog shall be provided with time outdoors and environmental enrichment. A veterinarian, certified animal behaviourist (excluding a dog trainer) or animal welfare scientist shall be involved in continuously monitoring the situation with each dog, assessing quality of life

and how it can be maintained and improved with human contact or contact with other dogs on a case by case basis.

(11) An impounded animal not wearing an identification tag for the current year may be given an inoculation, as recommended by a veterinarian, to provide temporary immunization against common diseases.

(12) (a) If any animal has bitten an animal or a person, or it is alleged that the animal has bitten an animal or a person, the Poundkeeper, Animal Control Officer, Manager, Municipal Law Enforcement Officer, or any person acting under his or her authority delegated by the Town, may impound the animal for the purpose of quarantine.

(b) If any animal has bitten an animal or a person, or it is alleged that the animal has bitten an animal or a person, the Poundkeeper may release the animal to the owner only if the Poundkeeper is satisfied that the owner will:

(i) take immediate steps to quarantine the animal;
(ii) ensure the animal will be properly contained so as not to be found running-at-large;
(iii) muzzle the animal;
(iv) adhere to any written conditions issued by the Poundkeeper; and
(v) pay the prescribed fees set out in the Town's Fees and Charges By-law No. 40-09, as amended or replaced.

(13) If an owner forfeits or surrenders an animal and it is evidenced in writing, the Poundkeeper shall take the animal into care and shall have the authority to deal with the animal as if the owner.

PART IV:

11. BASIC STANDARDS OF CARE

(1) Every person who keeps an animal within the Town's boundaries shall ensure that the animal is provided with:

(a) adequate, appropriate, and sufficient quantity and quality of food and potable water to allow for normal growth and maintenance of body weight;

(b) adequate care necessary for its general welfare, which includes care sufficient to preserve its health and well-being;
(c) adequate and appropriate space to enable the animal access to:

(i) natural movement and exercise;

(ii) rest and sleep;
(iii) sanitary conditions free from excess waste, urine or fecal matter, or any other contaminants that could affect the animal's health;
(iv) ventilation;
(v) regular diurnal lighting cycles of either natural or artificial light;
(vi) air temperature suitable for the health of the animal;
(vii) protection from the elements, including harmful temperatures;
(viii) reasonable medical attention and veterinary care to relieve distress from injury, neglect or disease; and
(ix) current immunization against rabies for every dog or cat sixteen (16) weeks of age or over.

(d) transportation in a manner that ensures its physical safety and general welfare, and excludes transport of an animal outside the passenger compartment of a vehicle unless the animal is:

(i) in a fully enclosed and adequately ventilated trailer or crate that securely fastened to the bed of the vehicle; or
(ii) securely and humanely tethered to prevent jumping or ejection from the vehicle, strangulation, and access to the outside edges of the vehicle; and
(iii) reasonably protected from extreme temperatures.

(2) Subsection 11(1) does not apply in respect of an activity regarding agricultural animal care, management or husbandry carried on in accordance with the reasonable and generally accepted practices of agricultural animal care, management or husbandry.

(3) Every animal owner or person in care and control of an animal, who has reasonable grounds to believe that an animal is being abused, subject to undue physical or psychological hardship, privation or neglect shall report his or her belief to an Animal Welfare Inspector in accordance with the *Provincial Animal Welfare Services Act*.

12. STANDARDS OF CARE FOR ANIMALS LIVING OUTDOORS

(1) If an animal, other than a cat, lives outdoors for continuous periods of time exceeding thirty (30) minutes, the animal owner or person having custody and control of the animal shall provide a structurally sound enclosure for the animal's use at all times. That enclosure shall be:

(a) weather-proofed and insulated sufficient to protect the animal from wind, rain, snow and sun;
(b) equipped with adequate bedding to protect against inclement conditions; and
(c) of proper size and design adequate and appropriate for the animal species.

(2) Every person who has the custody or control of an unsterilized cat or dog shall keep the animal indoors while the animal is in heat.

13. STANDARDS OF CARE REGARDING UNSANITARY CONDITIONS

(1) No person shall keep an animal within the Town in an unsanitary condition.

(2) For the purposes of Subsection 13(1), an unsanitary condition is characterized by the accumulation of urine or fecal matter, a strong odour, insect infestation or rodent attractants, and where the accumulation of any of the aforementioned are likely to endanger the health of any person or animal, or which is likely to disturb the enjoyment, comfort or convenience of any person or animal, in or about any place.

(3) Every owner who keeps an animal shall ensure that waste material and excrement is handled and disposed of in a sanitary manner.

(4) Every owner who keeps an animal shall remove waste excrement at least once (1) weekly from December 1 to April 1, and at least twice (2) weekly from April 2 to November 30.

(5) Every owner of an animal shall immediately remove and dispose of any feces left by the dog or cat on any premises other than those owned or occupied by the owner.

(6) Subsections 13(4) and 13(5) do not apply to an owner storing, removing or disposing of excrement in accordance with Regulation 267/03 of the *Nutrient Management Act*, S.O. 2002, c.4.

14. EUTHANASIA

(1) Every animal must be killed by the most humane course of action. An animal's pain and distress are deemed to be minimized if the animal is killed by a method that produces irreversible unconsciousness, and prompt subsequent death.

(2) A veterinarian may exercise his or her sole discretion to euthanize an animal if:

(a) the animal is suffering; and
(b) the animal's owner or custodian cannot be found promptly, or the veterinarian reasonably believes that:
    (i) the animal does not have an owner or custodian, or
    (ii) the animal's owner or custodian has abandoned the animal; and
(c) in the veterinarian's opinion, euthanasia is the most humane course of action.

(3) When possible, a person may bring sick or injured animal to a veterinarian to determine if the state of disease or injury means euthanasia is the most humane

course of action. If a person, Poundkeeper, Animal Control Officer, Manager, Municipal Law Enforcement Officer, or police officer are performing euthanasia they need to be trained by a veterinarian in the methods appropriate for the particular species. Pentobarbital, the agent used for the euthanasia of most domestic species is a controlled substance. Other methods are acceptable but technique differs by species and needs to be taught. Furthermore, euthanizing animals is known to contribute to poor mental health among those who perform the procedure (veterinarians, veterinary technicians, farmers, etc), it is not an assignment that should be taken lightly.

PART V:

15. PENS AND ENCLOSURES

(1) If an animal, except wildlife, is confined to a pen or other enclosed structure or area, the following requirements must be met:

(a) the pen or other enclosed structure or area, and any structures or material in it, must be in a state of good repair;

(b) the pen or other enclosed structure or area, and any surfaces, structures and materials in it, must be made of and contain only materials that are:

(i) safe and non-toxic for the animal; and
(ii) of a texture and design that will not bruise, cut or otherwise injure the animal; and

(c) the pen or other enclosed structure or area must not contain one (1) or more other animals that may pose a danger to the animal.

(d) "invisible fence" systems are not an effective or animal welfare-friendly means of ensuring that an animal is prevented from running-at-large, and are prohibited.

(2) If kept outside on the owner's premises for any continuous period exceeding thirty (30) minutes, the person having the custody or control of the animal shall provide for a weather-proofed and insulated enclosure for that animal's use that includes sufficient space to allow for the normal postural and behavioural adjustments, adequate amounts of ventilation, and intensity of light for the animal at all times.

16. TETHERS

Every person who has tethered an animal shall ensure, at all times, that an animal:

(a) is tethered on a chain, rope or similar device of less than three (3) metres in length;

(b) has unrestricted movement within the range of the tether, and cannot suffer injury or strangulation resulting from the tether;

(c) is tethered in a manner that constrains the animal to the property to which the animal is tethered;

(d) has access to adequate and appropriate food, water and shelter;

(e) is not tethered if a choke collar, choke chain, pronged collar or any similar device forms part of the tether;

(f) is not unsupervised on a tether;

(g) is not hitched, tied or fastened to a fixed object where a rope, chain, or cord is tied directly around the animal's neck; and

(h) is not hitched, tied or fastened to a fixed object as the primary means of confinement under circumstances that can be reasonably deemed to be inhumane.

17. UNATTENDED ANIMALS IN A VEHICLE

Every person who leaves an unattended animal in a motor vehicle in the Town shall ensure:

(a) the avoidance of contact between the animal and persons and other animals outside of the vehicle;

(b) the animal has suitable ventilation; and

(c) the animal is not exposed to extreme temperatures.

18. ANIMAL NOISE

(1) No owner shall permit persistent barking, calling, whining or other similar persistent sound made by any domestic pet or any other animal kept or used for any purpose other than agriculture, which sound is clearly audible at a point of reception.

(2) Agricultural operations and domestic farm animals are exempt from Subsection 18(1).

PART VI:

DRAFT

19. POTENTIALLY DANGEROUS DOG AND DANGEROUS DOG

(1) No owner shall permit or allow his or her dog to bite or attack a person or domestic animal.

(2) The Poundkeeper, Manager, Animal Control Officer, or Municipal Law Enforcement Officer trained by a vet or animal behaviourist on recognition of dangerous dogs shall have the authority to designate a dog as a potentially dangerous dog or a dangerous dog but before issuing such a designation shall take into consideration any mitigating factors.

(a) Mitigating factors include, without limitation, the following:

(i) the dog was, at the time of the aggressive behaviour, acting in defence to an attack by a person;
(ii) the dog was, at the time of the aggressive behaviour, acting in defence to an attack by a domestic animal;
(iii) the dog was, at the time of the aggressive behaviour, acting in defence of the animal's young;
(iv) the dog was, at the time of the aggressive behaviour, reacting to a person trespassing on the property of the owner;
(v) the dog was, at the time of the aggressive behaviour, reacting to a domestic animal trespassing on the property of the owner; and
(vi) the dog was, at the time of the aggressive behaviour, being teased, provoked, or tormented.

(3) The Poundkeeper, Manager, Animal Control Officer, or Municipal Law Enforcement Officer shall be empowered to declare a dog potentially dangerous upon receipt of a signed affidavit, and in the case of designating a dangerous dog, upon receipt of a signed affidavit, attested to by a witness, who actually saw the alleged dog bite a person or domestic animal, or saw the results of same. The declaration must identify the dog, the dog owner and their address.

(4) The Poundkeeper, Manager, Animal Control Officer, or Municipal Law Enforcement Officer may, either on his or her own initiative or as a result of a complaint from any person, conduct a reasonable inquiry into whether a dog should be designated as a potentially dangerous dog or a dangerous dog.

(5) The Poundkeeper, Manager, Animal Control Officer, or Municipal Law Enforcement Officer shall issue an Order designating a dog as a potentially dangerous dog if the dog:

(a) in the absence of any mitigating factor, has demonstrated a reasonable propensity, tendency or disposition to attack, bite, or cause injury to a person or domestic animal;
(b) has on at least (1) occasion behaved in a manner that poses a menace to the safety of a person or domestic animal;

(c) has been previously designated by another municipality as a potentially dangerous dog, and is kept or permitted to be kept by its owner in violation of the prescribed requirements;
(d) is a restricted pit bull and the dog's owner has failed, on at least one (1) occasion, to comply with one (1) or more of the requirements of this By-law or the regulations respecting restricted pit bulls; or
(e) in the opinion of an Animal Control Officer, Poundkeeper, Manager, or Municipal Law Enforcement Officer creates a reasonable concern for the well-being or safety of another animal or person.

(6) The Poundkeeper, Manager, Animal Control Officer, or Municipal Law Enforcement Officer shall issue an Order designating a dog as a dangerous dog if the dog:

(a) in the absence of any mitigating factor, has attacked, bitten, or caused injury to a person or domestic animal;
(b) in the absence of any mitigating factor, has killed a person or domestic animal;
(c) has been previously designated by the Town as a potentially dangerous dog or a dangerous dog, and is kept or permitted to be kept by its owner in violation of the prescribed requirements;
(d) has been previously designated by another municipality as a potentially dangerous dog or as a dangerous dog, and is kept or permitted to be kept by its owner in violation of the prescribed requirements; or
(e) is a restricted pit bull and the dog's owner has failed, on at least one (1) occasion, to comply with one (1) or more of the requirements of this By-law or the regulations respecting restricted pit bulls.

(7) Subject to Subsections 19(5) and (6), the Poundkeeper, Manager, Animal Control Officer, or Municipal Law Enforcement Officer may issue and serve an Order upon an owner, requiring the owner to do any or all of the following:

(a) muzzle the dog at all times when off the owner's premises using a muzzle that will not cause injury to the dog or interfere with the dog's vision or respiration;
(b) leash the dog at all times when off the owner's premises using a leash not to exceed one (1) meter in length;
(c) keep the dog securely confined on the owner's premises either indoors, or if outdoors, in addition to the provisions listed in Section 15 of this By-law, in a six (6)-sided enclosure at least two (2) metres by four (4) metres capable of preventing the entry of children and other animals and constructed to prevent the dog from escaping;
(d) allow a Poundkeeper, Manager, Animal Control Officer, or Municipal Law Enforcement Officer, to inspect the enclosure required in Clause (19)(7)(c) or to make whatever inquiry is reasonable to ensure compliance with this By-law;
(e) conspicuously display a sign on the property where the dog is kept that states there is a potentially dangerous dog or a dangerous dog on the property;
(f) confine the dog to allow lawful entry onto the premises of the dog owner without the fear of attack by the dog;

DRAFT

(g) further restrain the dog by whatever means is deemed reasonable and humane by the Poundkeeper, Manager, Animal Control Officer, or Municipal Law Enforcement Officer.
(h) ensure such dog is sterilized; or
(i) have implanted in such dog a microchip, and provide such microchip information to the Poundkeeper.

(8) Any Subsection 19(7) Order shall include:

(a) a statement that the Poundkeeper, Manager, Animal Control Officer, or Municipal Law Enforcement Officer has reason to believe that the owner's dog has bitten or attacked a person or domestic animal;
(b) a requirement that the owner muzzle the dog;
(c) information on restrictions of acquiring additional dogs;
(d) instructions on the process for having the potentially dangerous declaration removed pursuant to Subsection 19(10), if applicable; and
(e) a statement that the owner may request and is entitled to appeal the Order.

(9) Any Order issued pursuant to Subsection 19(8) takes effect immediately upon receipt, and the dog owner shall comply with all of the elements of the Order.

(10) A potentially dangerous dog designation shall be lifted if an owner submits proof of the following to the Poundkeeper, Manager, Animal Control Officer, or Municipal Law Enforcement Officer:

(a) successful completion of a recognized dog obedience course after the issuance of the Order;
(b) successful completion of a recognized dog handling course after the issuance of the Order; and
(c) a recommendation from a veterinarian or certified animal behaviourist to lift the designation.

(11) Notwithstanding Subsection 19(10), any subsequent designation as a potentially dangerous dog shall not be lifted other than further to a decision on Appeal.

(12) An owner of a potentially dangerous dog shall be precluded from acquiring and licensing additional dogs until such owner submits proof of the following to the Poundkeeper, Manager, Animal Control Officer, or Municipal Law Enforcement Officer:

(a) Successful completion of a recognized dog obedience course within the past thirty (30) days;
(b) Successful completion of a recognized dog handling course within the past thirty (30) day; and;
(c) a recommendation from a veterinarian.

(13) An owner of a dangerous dog may not acquire and license additional dogs.

(14) An owner, whose dog has been designated as a potentially dangerous dog or a dangerous dog shall immediately advise the Poundkeeper, Manager, Animal Control Officer, or Municipal Law Enforcement Officer of the particulars pertaining to any ownership transfer of the dog or address change.

(15) If a dangerous dog or potentially dangerous dog is not restrained and the owner or custodian cannot be readily located, the Poundkeeper, Manager, Animal Control Officer or Municipal Law Enforcement Officer may remove the dog from the property if it is reasonable to preserve public safety, including the well-being of another animal.

(a) All reasonable costs incurred by the Town to facilitate this removal shall be borne by the owner of the dog.

(16) If an owner whose dog has been designated as a dangerous dog is unwilling or unable to comply with the requirements herein, and the owner has surrendered the dog to the Poundkeeper, and evidenced in writing, the dog shall then be humanely euthanized by trained Poundkeeper staff or veterinarian after a ten (10) day holding period.

(17) Any dog designated as a dangerous dog under this By-law shall not be offered for adoption or sale.

(18) The cost of humanely euthanizing a dangerous dog shall be borne by the owner unless the dog owner surrendered the dog to the Poundkeeper.

PART VII:

20. ANIMAL TRAPS

(1) No person shall use, set or maintain a leg hold trap, a killing trap or a snare trap unless licensed to do so by the Ministry of Natural Resources and Forestry.

(2) Subsection 20(1) does not apply to:

(a) reasonable use by agricultural operations to protect livestock, crops, and the agricultural operation overall;
(b) reasonable efforts to control and eliminate rodents and pests, such as mice and rats, in relation to a residential, commercial, industrial, or public space property; or
(c) a pest control company or agency which has been hired to address an identified issue utilizing reasonable and humane common trade practices and procedures.

DRAFT

21. FERAL CATS

(1) An Animal Control Officer, Poundkeeper, Manager, or Municipal Law Enforcement Officer may operate a "trap, neuter, return program" in respect of any feral cat or feral cat colony, and shall maintain a record of feral cat sterilizations.

(2) Any feral cat may be sterilized and subsequently released, at the sole discretion of the Poundkeeper.

(3) If, in the opinion of the Poundkeeper, a feral cat is injured or ill and euthanasia is the most humane course of action, the feral cat shall be euthanized.

22. LIVESTOCK

(1) No person shall keep livestock on any premises in Town unless the premises are zoned to permit the keeping of livestock by the Town's Comprehensive Zoning By-law No. 129-90, as amended or replaced.

(2) No owner of livestock shall permit any livestock to be running-at-large in the Town.

(3) Livestock shall be deemed to be running-at-large if found in any place other than the premises of the owner of the livestock, and not under the control of any person.

(4) An Animal Control Officer, Manager, Municipal Law Enforcement Officer, police officer or the Poundkeeper may seize and impound any livestock running-at-large in the Town.

(5) Any livestock seized pursuant to Subsection 22(4) shall be considered impounded at the time and place of the seizure by an Animal Control Officer, Manager, Municipal Law Enforcement Officer, police officer, or the Poundkeeper.

(6) The Poundkeeper shall make reasonable efforts to determine the identity of the owner of the impounded livestock, and inform the owner that the livestock has been impounded in accordance with this By-law and the *Pounds Act*.

(7) Further to impoundment of livestock, the Poundkeeper shall:

(a) provide such veterinary or other care for any injured or ill impounded livestock necessary to preserve life or relieve distress;
(b) euthanize any impounded livestock without delay if the owner cannot be found and, in the opinion of the Poundkeeper, such action is the most humane course of action. Euthanasia shall only be performed by a person trained to administer it.

DRAFT

(c) be entitled to recover from the owner of the impounded livestock all reasonable costs of veterinary or other care provided while the livestock was impounded; and
(d) be entitled to recover from the owner of the impounded livestock any reasonable fees for the redemption of the livestock.

(8) Every owner shall retrieve the impounded livestock from the Poundkeeper within four (4) days of the date of impoundment, excluding the day of impoundment, pound closures, and any statutory holidays.

(9) The owner of any impounded livestock may secure the release of livestock during the redemption period subject to:

(a) payment of all reasonable costs and fees incurred by the Pound; and
(b) fulfillment of any other action in relation to the care or control of the impounded livestock that the Town or Poundkeeper may direct.

(10) If the owner of the livestock fails to comply with Subsection 22(8) or (9), the Poundkeeper is deemed to be the owner of the livestock and possesses the sole discretion to decide whether to keep, sell, or otherwise dispose of the impounded livestock.

(11) The Poundkeeper shall keep a record of all impounded livestock pursuant to Subsection 10(3).

23. EXOTIC ANIMALS

(1) No person shall own, breed, harbour, possess, keep, sell or offer for sale any exotic animal listed in Schedule "A" herein unless through statutory authorization.

(2) Notwithstanding Subsection 23(1) herein and Section 6.22 of the Town Zoning By-law No. 129-90, as amended or replaced, no person shall keep an exotic animal within the Town except in the following places or circumstances:

(a) a veterinary hospital under the care of a veterinarian;
(b) on the lands and premises of the Poundkeeper or authorized agency to house or shelter exotic animals, on a temporary basis, due to spatial or other special requirements;
(c) on the lands and premises listed under Schedule "B" herein;
(d) non-venomous snakes, non-venomous lizards, insects, turtles, spiders or squamata in an escape-proof enclosure;
(e) a maximum of five (5) non-venomous snakes, non-venomous lizards or spiders in one (1) residential area owned or occupied by that person;
(f) any lagomorph, marsupial or rodent in an approved enclosure; or
(g) a provincially authorized wildlife custodian with statutory authorization.

DRAFT

(3) No person may keep exotic animals enumerated in Schedule "A" unless they are part of an agricultural operation and specifically enumerated in Schedule "B".

(4) Exotic animals may be kept on lands and premises where exotic animals are kept for public exhibition and display as part of a commercial establishment provided such lands and premises are enumerated in Schedule "B".

(5) Exotic animals may be kept at a Rehabilitation Centre provided the Rehabilitation Centre is specifically listed in Schedule "B".

(6) Any person may apply to Council to have lands or premises added to Schedule "B", and the application may only be approved if he or she satisfies Council that the exotic animal(s) will only be kept for the purposes of an agricultural operation, public exhibition and display, or Rehabilitation Centre.

(7) All exotic animal registrations in effect prior to the passage of this By-law shall remain valid subject to the following conditions:
(a) any person possessing an exotic animal registration shall immediately notify the Licence Agent of the loss, death, or sale of the exotic animal; and
(b) failure to notify the Licence Agent pursuant to Clause 23(7)(a) shall lead to the cancellation of the registration.

(8) All registrations for exotic animals are non-transferable.

(9) If an exotic animal is seized or impounded pursuant to this By-law, the owner shall pay to the Poundkeeper any and all fees, costs and charges involving the capture, care, transportation, disposal of, and veterinary services of the animal seized or impounded, in addition to all other fees and charges payable under the Town's Fees and Charges By-law No. 40-09, as amended or replaced.

PART VIII:

24. LICENCE SUSPENSIONS, REFUSALS, AND REVOCATIONS

(1) A Licence Agent may refuse to issue a licence, or may suspend or revoke a licence, if:

(a) the owner has been found guilty of an offence or failed to comply with a provision under this By-law on at least two (2) occasions within the preceding twelve (12) months;
(b) there are reasonable grounds to believe that the licensee or applicant will not comply with this By-law;
(c) the licensee or applicant refuses to permit an inspection; or

(d) a veterinarian confirms an outbreak of a disease that would require any form of quarantine.

PART VIII:

25. APPEALS

(1) A dog owner may appeal an Order designating a dog as a potentially dangerous dog or as a dangerous dog.

(2) An appeal shall be made in writing and delivered to the Clerk within fifteen (15) days of the owner receiving notice of the Order, including the prescribed appeal fee pursuant to the Town's Fees and Charges By-law No. 40-09, as amended or replaced.

(3) If an appeal is received after the prescribed appeal period, the Clerk may dismiss the appeal with written notification to the parties. The Clerk, in his or her sole discretion, may accept a late appeal provided it is received within thirty (30) days and there is compelling proof of extraordinary circumstances that caused the failure to appeal within the prescribed period.

(4) An appeal does not operate as a stay. The Order remains in force and all conditions must still be fulfilled pending disposition of the appeal.

(5) The Clerk shall give an appellant at least five (5) days written notice of a Hearing by delivering a Notice of Hearing by registered mail or e-mail to the addresses shown in his or her appeal. The Notice of Hearing shall include:

(a) a statement setting out the time, place, and manner in which the Committee will convene for the appeal hearing; and

(b) a statement that, if the owner does not attend the hearing, the Committee will proceed with the hearing in the absence of the owner.

(6) Every appeal shall be considered at a public Hearing held before the Committee, and may be held electronically pursuant to the *Statutory Powers Procedure Act,* R.S.O. 1990, S.22.

(7) A Hearing shall be held pursuant to the *Statutory Powers Procedure Act*.

(8) At the conclusion of a Hearing in respect to Subsection 25(1), the Committee shall consider the following:

(a) the dog's behaviour;

(b) the seriousness of the injuries caused by the bite or attack on a person or a domestic animal;
(c) extraordinary circumstances or mitigating factors;
(d) the likelihood that a similar attack will be repeated;
(e) the dog's physical potential for inflicting harm;
(f) the seriousness of the owner’s previous convictions under this By-law, any other by-law or statute;
(g) the steps taken by the owner to comply with this By-law and avoid further violations; and
(h) any agreed statement of facts or joint resolution tendered by the parties.

(9) The Committee shall consider the evidence presented at a Hearing and has the authority to make one (1) of the following Rulings with Reasons:

(a) confirm the Order;
(b) confirm the Order with modified conditions;
(c) change the designation from dangerous to potentially dangerous, subject to the provisions of Section 19, with conditions;
(d) change the designation from potentially dangerous to dangerous, subject to the provisions of Section 19, with conditions; or
(e) quash the Order.

(10) The Clerk shall deliver to the appellant the Ruling of the Committee with Reasons by registered mail or e-mail to the addresses shown on his or her appeal and to the Poundkeeper, Manager, Animal Control Officer, or Municipal Law Enforcement Officer within fifteen (15) days of the Committee’s Ruling.

(11) The Ruling of the Committee shall be final and binding.

(12) Nothing in this By-law, nor any decision of the Committee shall preclude a court of competent jurisdiction from imposing an Order under any other applicable law. The Ruling of the Committee shall terminate if a court of competent jurisdiction makes an Order respecting the Order of the Poundkeeper, Manager, Animal Control Officer, Municipal Law Enforcement Officer, or Licence Agent.

(13) An appeal to the Dangerous Dogs Appeals Committee that was commenced under By-law No. 176-2001, as amended by By-law No. 33-04, but not disposed of before passage of this By-law, shall be continued and disposed of under the same provisions of By-law No. 176-2001, as amended, as if those By-laws were still in force and effect.

DRAFT

26. SERVICE

(1) An Animal Control Officer, Manager, Municipal Law Enforcement Officer, Poundkeeper or the Licence Agent shall serve any Decision, Notice or Order by handing it to the person, failing which the Order shall be served:

(a) by handing it to an adult person on the property of the owner or occupant and by sending a copy by registered mail to the address last known to the Town;
(b) by posting it in a conspicuous place at the property of the owner or occupant and by sending a copy by registered mail to the address last known to the Town; or
(c) by sending it by e-mail and by registered mail to the person to the addresses last known to the Town.

(2) Any Decision, Notice or Order issued by the Animal Control Officer, Manager, Municipal Law Enforcement Officer, Poundkeeper or the Licence Agent, or Appeal Ruling of the Committee by the Clerk, or appeal filed by a person pursuant to this By-law shall be deemed received as follows:

(a) by registered mail: five (5) days after the date of mailing by registered mail;
(b) by e-mail delivered before 5:00pm on a weekday: the same business day;
(c) by e-mail delivered after 5:00pm on a weekday: the next business day;
(d) by e-mail delivered on a weekend or a holiday: the next business day.

PART IX:

27. ENFORCEMENT AND RIGHT OF ACCESS

(1) This By-law shall be enforced by the Animal Control Officer, Manager, Municipal Law Enforcement Officer, Poundkeeper and the Licence Agent.

(2) Subject to sections 436 and 437 of the *Municipal Act*, *2001,* an Animal Control Officer, Manager, or Municipal Law Enforcement Officer may, at all reasonable times, enter upon any place to ensure compliance with this By-law, any Decision or Order issued pursuant to this By-law, or licence conditions. Any animal that is perceived as a threat or potential threat, may be restrained during the course of the inspection.

(3) Subject to sections 436 and 437 of the *Municipal Act*, *2001,* an Animal Control Officer, Manager, or Municipal Law Enforcement Officer may, at all reasonable times, enter upon any place if he or she has reasonable grounds to believe an animal is in critical distress.

(4) The Animal Control Officer, Manager, or Municipal Law Enforcement Officer may, for the purposes of an inspection under Subsections 27(2) or 27(3):

(a) require the production for inspection of relevant documents or things;
(b) inspect, remove, and make copies or extracts of relevant documents or things;
(c) require information from any person concerning a matter relevant to the inspection;
(d) make examinations or take tests, samples or photographs necessary for the purposes of the inspection; and
(e) be accompanied by persons possessing special or expert knowledge related to the purpose of the inspection.

(5) Subject to section 438 of the *Municipal Act, 2001*, if an Animal Control Officer, Manager, or Municipal Law Enforcement Officer has been prevented from carrying out an inspection, he or she may undertake an inspection pursuant to a judicial order .

(6) Subject to section 439 of the *Municipal Act*, *2001,* an Animal Control Officer or Municipal Law Enforcement Officer may apply for a search warrant to carry out an inspection of a place.

(7) If an Animal Control Officer, Manager, or Municipal Law Enforcement Officer has reasonable grounds to believe a contravention of this By-law has occurred, he or she may issue an Order requiring any person who contravened the By-law, or who caused or permitted the contravention, to discontinue the contravention.

(8) If an Animal Control Officer, Manager, or Municipal Law Enforcement Officer has reasonable grounds to believe a contravention of this By-law has occurred, he or she may make an Order requiring the person to do work to correct the contravention.

(9) No person shall hinder or obstruct, or attempt to hinder or obstruct an Animal Control Officer, Manager, Municipal Law Enforcement Officer, Poundkeeper or the Licence Agent in carrying out his or her duties under this By-law.

(10) No person shall neglect or refuse to produce or provide any information or thing requested by an Animal Control Officer, Manager, Municipal Law Enforcement Officer, Poundkeeper or the Licence Agent in carrying out his or her duties under this By-law.

(11) No person shall knowingly make, participate in, assent to, or acquiesce, in the provision of false information in a statement, affidavit, application, appeal or other document prepared, submitted or filed under this By-law.

(12) No shall person shall fail to comply with an Order issued pursuant to this By-law.

DRAFT

PART X:

28. PENALTIES

(1) Every person who contravenes any provision of this By-law, and every director or officer of a corporation who concurs in such contravention by the corporation, is guilty of an offence and, upon conviction, is liable to a fine and such other penalties, as provided for in the *Provincial Offences Act*, S.O. 1990, c. P.33 and the *Municipal Act, 2001*.

(2) Pursuant to Section 429 of the *Municipal Act, 2001*, every person who is guilty of an offence under this By-law shall be subject to the following penalties:

(a) Upon a first conviction, to a fine of not less than $500 and not more than $50,000;

(b) Upon a second or subsequent conviction for the same offence, to a fine of not less than $500 and not more than $100,000;

(c) Upon conviction for a continuing offence, to a fine of not less than $100 and not more than $10,000 for each day or part thereof that the offence continues. The total daily fines shall not exceed $100,000; and

(d) Upon conviction for a multiple offence, for each offence included in the multiple offence, to a fine of not less than $100 and not more than $10,000. The total of all fines for each included offence is not limited to $100,000.

(e) If a person convicted of an offence is a corporation, the corporation is liable to a fine of not less than $500 and not more than $100,000.

29. ADMINISTRATIVE MONETARY PENALTIES

(1) Instead of laying a charge under the *Provincial Offences Act* for failure to comply with any provision of this By-law, an Order, or any licence condition, an Animal Control Officer, Manager, or Municipal Law Enforcement Officer may issue an administrative monetary penalty to a person who has contravened this By-law, subject to Section 434.1 of the *Municipal Act, 2001*.

(2) An Animal Control Officer, Manager, or Municipal Law Enforcement Officer possesses the discretion to decide whether to pursue a charge under the *Provincial Offences Act* or issue an administrative monetary penalty.

(3) If an administrative monetary penalty is issued to a person for failure to comply with a provision in this By-law, no charge shall also be laid under the *Provincial Offences Act* against the same person for the same non-compliance.

(4) Every person who has contravened any provision of this By-law is liable to the corresponding administrative monetary penalty enumerated in Schedule "C" herein, in accordance with the Town's Administrative Penalty By-law No. 111-2019, as amended or replaced.

30. COLLECTION OF UNPAID FINES

(1) The Town may recover its expenses of remedying a contravention of this By-law by invoicing the person who engaged in the contravention, by instituting legal proceedings, or by adding the cost, including interest, to the tax roll in the same manner as municipal taxes.

(2) An administrative monetary penalty issued to a person in accordance with the Town's Administrative Penalty By-law No. 111-2019, as amended or replaced, may be added to the municipal tax roll and collected in the same manner as municipal taxes.

PART XI:

31. MODIFICATIONS

The Clerk of the Town is authorized to effect any minor modifications, corrections, or omissions, solely of an administrative, numerical, grammatical, semantical or descriptive nature to this By-law or its schedules after the passage of this By-law.

32. SEVERABILITY

If a Court of competent jurisdiction declares any Section or part of a Section of this By-law invalid, the remainder of this By-law shall continue in force unless the Court makes an Order to the contrary.

33. IMMUNITY

No Animal Control Officer, Manager, Municipal Law Enforcement Officer, Poundkeeper, or Licence Agent, is personally liable for any act or omission done in good faith in the execution or intended execution of the person's powers or duties under this By-law.

DRAFT

34. REPEAL

By-law Nos. 119-97, 156-97, 23-2000, 82-2001, 146-2001, 176-2001, 81-2003, 32-04, 33-04, 135-10, 58-12, 106-2015, 107-2015, 74-2018, and 13-20 are repealed in their entirety.

35. FORCE AND EFFECT

This By-law shall take effect on the date of enactment.

Read a first, second and third time and finally passed this day of , 2021.

_____
Mayor

_____
Clerk

I, Carol Schofield, the Clerk of The Corporation of the Town of Fort Erie certifies the foregoing to be a true copy of By-law No. XX-2021 of the said Town. Given under my hand and the seal of the said Corporation, this day of , 20

_____

DRAFT

Schedule "A"

Animal Species Classifications

1. The following non-exhaustive list of animal classes shall be considered exotic animals:

(a) All Anseriformes (e.g. ducks, geese, swans and screamers), except if located on rural or agricultural premises zoned under a Town zoning by-law permitting such a use;

(b) All Artiodactyla (e.g. cattle, goats, sheep, pigs, deer, elk, alpacas and llamas, antelopes, giraffes and hippopotamuses), except if located on rural or agricultural premises zoned under the Town's zoning by-law permitting such a use;

(c) All Birds, the keeping of which is prohibited in the *Migratory Birds Convention Act,* S.C. 1994 c.22, and regulations thereto; and all animals, the keeping of which is prohibited in the *Fish & Wildlife Conservation Act,* S.O. 1997, c.41 and regulations thereto including but not limited to:

- (i) Anseriformes (such as ducks, geese, swans, screamers);
- (ii) Galliformes (such as pheasants, grouse, guinea fowls, turkeys);
- (iii) Gruiformes (such as cranes, rails);
- (iv) Phoenicopteriformes (such as flamingos);
- (v) Sphenisciformes (such as penguins); and
- (vi) Struthioniformes (flightless ratites such as ostriches, rheas, cassowaries, emus, kiwis).

(d) All Canidae (such as coyotes, wolves, foxes, hybrid wolf dogs) except Canis Familiaris (domestic dog);

(e) All Carnivora (e.g. otters, wolves, bears, coyotes, foxes, tigers, leopards, cougars, lions, lynx, mink, skunks, weasels, badgers, mongooses and raccoons), except dogs, cats and ferrets;

(f) All Chiroptera (bats such as fruit bats, myotis, flying foxes);

(g) All Crocodylia (such as Alligators, Gavials, Caymans and Crocodiles);

(h) All Dermoptera (all Lemurs);

(i) All Diurnal and Nocturnal Raptors (such as Eagles, Hawks and Owls) unless authorized by the Ministry of Natural Resources and Forestry;

(j) All Edentates (such as Anteaters, Sloths and Armadillos);

(k) All Felidae (such as tigers, leopards, cougars) except the Felidae Domesticus (domestic cat);

(l) All Galliformes (e.g. pheasants, grouse, guinea fowls, turkeys, chickens and peafowls), except if located on rural or agricultural premises zoned under a Town zoning by-law permitting such use;

(m) All Hyaenidae (such as hyenas);

(n) All Hyracoidea (such as all Hyrax);

(o) All Lagomorpha (such as Hares and Pikas), except domestic Rabbits;

(p) All Marsupialia (e.g. koalas, kangaroos, opossums and wallabies), except sugar gliders derived from self-sustaining captive populations;

(q) All Mustelidae (such as mink, skunks, weasels, otters, wolverines, badgers) except ferrets;

(r) Non-human primates (such as chimpanzees, gorillas, monkeys, lemurs);

(s) All Perissodactyla (e.g. horses, donkeys, jackasses, mules, zebras and ponies), except if located on rural or agricultural premises zoned under a Town zoning by-law permitting such a use;
(t) All Pholidota (such as all Pangolin);
(u) All Pinnipeds (such as Seals, Fur Seals and Walruses);

(v) All Non-human Primates (e.g. chimpanzees, gorillas, monkeys and lemurs);
(w) All Procyonidae (such as Raccoons, Coatis and Cacomistles);
(x) All Proboscidea (such as Elephant, Rhinoceros and Hippopotamus);
(y) All snakes of the families Pythonidae and Boidae (such as pythons, boa constrictors and anacondas);
(z) All Venomous Reptiles (such as front or rear fanged snakes and helodermid lizards);
(aa) All Rodentia (e.g. porcupines, prairie dogs, nutria and chinchillas) except Rodentia:

(i) where neither the female nor the male of the species exceeds or will exceed fifteen hundred (1,500) grams in weight before or at maturity; and
(ii) that are derived from a self sustaining captive population;

(bb) All other Venomous or Poisonous Animals except Grammostola rosea (Chilean Rose), Brachypelma smithi (Mexican Red-Knee) and Avicularia avicularia (Pink-Toe) Tarantulas;
(cc) All Sciuridae (such as Flying Squirrels and Red Squirrels);
(dd) All families of Venomous Snakes, even if de-venomized;
(ee) All families of Venomous Spiders, except Tarantulas;
(ff) All Squamata (e.g. lizards and snakes) except:
(i) non-venomous snakes where neither the female nor the male of the species exceeds or will exceed three (3) metres in length from nose to tip of tail before or at maturity; and
(ii) non-venomous lizards (not including Iguana) where neither the female nor the male of the species exceeds or will exceed two (2) metres in length from nose to tip of tail before or at maturity;

(gg) All odd-toed Ungulates (such as zebras, wild asses, rhinoceroses and tapirs) except domestic horses, donkeys, asses and domestic horse or donkey hybrids;
(hh) All Ursids (such as bears);
(ii) Varanus komodoensis (Komodo Dragon); '
(jj) All viverrids (such as civets, binturongs and fossas)

DRAFT

Schedule "B"

Exotic Animal Exceptions

1. Agricultural Operations;
2. Public Exhibition and Display;
3. The lands and premises at 2821 Stevensville Road, Fort Erie, Ontario L0S 1S0 (commonly called Safari Niagara) and being more particularly described as PIN 64245-0189 (LT), and 4206 Fox Road, Fort Erie, Ontario, L0S 1S0 (commonly called Safari Niagara) and being more particularly described as PINs 64245-0194 (LT) and 642460191(LT);
4. Rehabilitation Centres

DRAFT

Schedule "C"

Administrative Monetary Penalties

For the purposes of this By-law:

Column 1 ("Description of Offence") in the table sets out the short form wording to be used in a Penalty Notice for a contravention of the designated provisions listed.

Column 2 ("Section") in the table lists the specific section of the provision that has been contravened.

Column 3 ("Penalty Tier 1") sets out the Administrative Monetary Penalty amounts that are payable for contraventions of the designated provisions listed in Columns 1 and Column 2.

Column 4 ("Penalty Tier 2") sets out the Administrative Monetary Penalty amounts that are payable for a second (2nd) contravention of the designated provisions listed in Columns 1 and Column 2 by the same person within a one (1) year period since the previous offence conviction.

Column 5 ("Penalty Tier 3") sets out the Administrative Monetary Penalty amounts that are payable for a third (3rd) contravention of the designated provisions listed in Columns 1 and Column 2 by the same person within a one (1) year period since the previous offence conviction.

Offence	Section	Penalty Tier 1	Penalty Tier 2	Penalty Tier 3
Fail to notify Poundkeeper of address change in prescribed period of time	5(15)(b)	$200	$300	$450
Fail to notify Poundkeeper of or ownership change in prescribed period of time	5(15)(c)	$200	$300	$450
Failure to provide a rabies certificate	5(9)	$250	$350	$500
Fail to ensure that identification tag corresponding to the licence issued for dog or cat is attached to the dog or cat at all times	6(3)	$250	$350	$500
Fail to obtain kennel licence	7(1)	$500	$650	$750
Construct, erect, or maintain a kennel not in accordance with Town By-laws	7(4)	$300	$450	$750
Fail to ensure standards of care regarding Kennel Care	7(16)	$300	$450	$750
Fail to maintain a log of all dogs on premise	7(18)	$250	$350	$500
Admit a dog into the kennel without rabies immunization	7(19)	$250	$350	$500

No person shall own, possess or harbour in any one (1) household or on any premises more than three (3) dogs	8(1)	$250	$350	$500
No owner shall keep or permit to be kept on any one (1) premise owned or occupied by them more than six (6) cats in a residential area	8(2)	$250	$350	$500
Fail to obtain a dog or cat licence	8(3)	$250	$350	$500
No person shall breed or offer for sale dogs without a kennel license or pet shop license	8(4)	$300	$450	$650
No person shall possess or harbour a rescue foster dog without a licence	8(5)	$250	$350	$500
Permit a dog to be on or in any cemetery, public beach, or park within the Town	8(7)	$200	$300	$450
No owner shall allow, permit or cause any animal to be running-at-large	9(1)	$250	$500	$750
Fail to keep dog on a leash of no more than 182cm (6ft)	9(2)	$200	$300	$450
Permit dog in off leash area where muzzle order issued	9(4)	$400	$550	$750
Fail to provide a Basic Standard of Care	11(1)	$300	$450	$750
Fail to adhere to an obligation to report	11(4)	$250	$350	$500
Fail to provide a standard of care for a dog outdoors	12(1)	$250	$350	$500
Fail to provide an animal with adequate sanitary conditions	13(1)	$250	$350	$500
Fail to remove and dispose of animal excrement	13(5)	$250	$300	$450
Fail to remove animal excrement on property within prescribed period of time	13(4)	$200	$300	$450
Fail to provide an animal with a proper pen or enclosure	15(1)	$250	$350	$500
Fail to provide a proper enclosure for an animal outdoors for more than 30 minutes	15(2)	$250	$350	$500
Tether an animal not in accordance with the provisions in the by-law	16(1)	$300	$450	$600
Leave animal unattended in vehicle not in accordance with the By-law	17(1)	$350	$500	$750
Fail to ensure dog or cat immunized against rabies	17(5)	$250	$350	$500
No owner shall permit or allow the persistent barking, calling, whining or other similar persistent sound	18(1)	$250	$350	$500

Fail to ensure a dog does not bite or attack another person or domestic animal	19(1)	$350	$500	$750
Fail to comply with a dangerous dog order	19(9)	$350	$500	$750
Offer dangerous dog for adoption	19(17)	$350	$500	$750
Use, set, or maintain a leg hold trap, a killing trap, or snare trap	20(1)	$500	$650	$750
No person shall keep livestock on any premises unless permitted.	22(1)	$250	$500	$750
No person shall own, breed, harbour, possess, keep, sell or offer for sale any exotic animal	23(1)	$350	$500	$750
Fail to comply with an Order	27(12)	$350	$500	$750
No person shall hinder or obstruct an authorized person in the administration of the by-law	27(19)	$350	$500	$750
Permit a dangerous dog to be running-at-large	28(24)	$350	$500	$750

DRAFT

Fort Erie Fire & Emergency Services

Prepared for	Regular Council	**Report No.**	FES-03-2021
Agenda Date	February 22, 2021	**File No.**	230803

Subject

AWARD OF TENDER FOR THE CONSTRUCTION OF FIRE STATION 4 – CONTRACT NO. FEFD-20T-FSTN19

Recommendations

THAT Council authorizes the extension of the Raimondo and Associates Architects Inc. (F. Emilio Raimondo, President) assignment for contract administration and inspection services in the amount of $122,766.03 (including 13% HST); and further

THAT Council amends the 2020 Capital Budget to supplement the Fort Erie Fire Department – New Station No. 4 – Contract No. FEFD-20T-FSTN19 by $2,650,000, with an increase in Debentures ($2,650,000), and Land Sales ($325,000.00), and a decrease in Development Charges Reserve Funding ($325,000); and further

THAT Council accepts and approves the tender submission for the Fort Erie Fire Department – New Station No. 4 - Contract No. FEFD-20T-FSTN19, a Stipulated Price Contract from G.S. Wark Limited (Craig Hambly, President), as recommended by Raimondo and Associates Architects Inc., in the amount of $6,521,795.00 (including 13% HST).

Relation to Council's 2018-2022 Corporate Strategic Plan

Priority: 2: Effective, Sustainable Infrastructure for the Future

Strategic Objective: Maintaining and investing in sustainable infrastructure that services the entire community and builds a strong, vibrant, and attractive community.

List of Stakeholders

1) Mayor and Council of the Town of Fort Erie
2) Ratepayers of the Town of Fort Erie
3) Residents within the Fire District

4) Town of Fort Erie Fire Department and its Firefighters
5) Raimondo and Associates Architects Inc. (F. Emilio Raimondo, President)
6) G.S. Wark Limited (Craig Hambly, President)
7) Remaining Bidders

Prepared by:	Approved by:
Original signed	*Original signed*
Ed Melanson, CMMIII Fire Chief/CEMC	Tom Kuchyt, CET Chief Administrative Officer

Purpose of Report

Council authorizes the extension of the Raimondo and Associates Architects Inc. (F. Emilio Raimondo, President) assignment for contract administration and inspection services in the amount of $122,766.03 (including 13% HST); and further

Council amends the 2020 Capital Budget to supplement the Fort Erie Fire Department – New Station No. 4 – Contract No. FEFD-20T-FSTN19 by $2,650,000, with an increase in Debentures ($2,650,000), and Land Sales ($325,000.00), and a decrease in Development Charges Reserve Funding ($325,000); and further

Council accepts and approves the tender submission for the Fort Erie Fire Department – New Station No. 4 - Contract No. FEFD-20T-FSTN19, a Stipulated Price Contract from G.S. Wark Limited (Craig Hambly, President), as recommended by Raimondo and Associates Architects Inc., in the amount of $6,521,795.00 (including 13% HST).

Analysis

Background

Council approved the proposal from Raimondo & Associates Architects Inc. to provide architectural design for the Fort Erie Fire Department – New Station No. 4 – Contract No. FEFD-20T-FSTN19 to the upset limit of $151,085.24 (including 13% HST) at the October 21, 2019 Council, through Administrative Report FES-06-2019.

Following the award of contract to Raimondo & Associates Architects Inc., the Niagara Region requested that a Tree Protection Plan be conducted on the property, a cost not included in their previously agreed upon scope of work. Additional fees were awarded to Raimondo & Associates Architects Inc. for this additional service. Staff also concluded Raimondo & Associates Architects Inc. should prepare and evaluate the Request for Pre-Qualification of General Contractors – New Town of Fort Erie Fire Station No.4, for

the construction project due to their expertise in this field; a service which included additional fees.

Through Council's adoption of the 2020 budget, Town Staff were authorized to proceed with the tender process for the 2021 Fire Station 4 Construction Project, once design was completed.

In summary, the works in this tender are:

- Construction of a new fire station located on the east side of Ridge Road South between Frances Street and Rebstock Road in Fort Erie and associated site works.
- Work generally includes but is not limited to a new approximately 1,112m2 (11,969 sq. ft.) one storey with mezzanine volunteer fire station.
- Site works including clearing and grading pavements, landscaping, and servicing.

Contract Administration and Inspection Services

The original competitive RFP process incorporated architectural design services as the primary tasks and contract administration and inspection services as provisional tasks. Raimondo & Associates Architects Inc. was competitively rated for the architectural design and contract administration and inspection receiving the highest technical score, with the lowest design fees. The architectural design services and the preparation and evaluation of the Request for Tender have been completed by Raimondo & Associates Architects Inc., but the provisional contract administration and inspection services have not yet been awarded.

Based on this, plus competitive evaluation results, Town staff recommends that Raimondo & Associates Architects Inc. be retained to provide contract administration and inspection services to the upset limit of $122,766.03 (including 13% HST) for the FSTN19 assignment.

Table 1: Contract Administration and Inspection Services

FSTN19 ~ FORT ERIE FIRE DEPARTMENT ~ NEW STATION NO. 4 Contract No. FEFD-20T-FSTN19	
Project Component	**Fees (including HST)**
Contract Administration and Inspection Services	$122,766.03
Total Fees for Contract Administration and Inspection Services	**$122,766.03**

All amounts include HST

Tender Call

This project had an approved budget of $3,300,000 (including non-rebated hst) for construction. Tender No. FEFD-20T-FSTN19 was issued in accordance with and

adhered to the provision of the Town of Fort Erie's Purchasing By-law (By-Law No. 2-10, a By-law Respecting the Purchase of Goods, Services and Construction).

Tenders closed on Tuesday February 9, 2021 at 11:00 a.m. local time and were publicly opened via teleconference shortly thereafter. A total of 5 tenders were received through Biddingo, with one deemed non-compliant as per the Town of Fort Erie's Purchasing By-law (By-Law No. 2-10, a By-law Respecting the Purchase of Goods, Services and Construction). Raimondo & Associates Architects Inc. has reviewed the submitted tenders checking them for mathematical errors and tender specification conformance, recommending the Stipulated Price Contract No. FEFD-20T-FSTN19 be awarded to G.S. Wark Limited, of Hamilton, Ontario. Submission details from the contractors are available for review by members of Council in the Fire Department.
The tender summary is presented in Table 2 below:

Table 2: Tender Summary

FSTN19 ~ FORT ERIE FIRE DEPARTMENT ~ NEW STATION NO. 4 Contract No. FEFD-20T-FSTN19		
Total Project Construction Funds	**$3,300,000.00**	
Submitted Tenders		
Contractor	**Tender Price (including 13% HST)**	**Tender Price (net of non-rebatable taxes)**
Aquicon Construction Co. Ltd.	$7,208,270.00	$6,491,270.40
Bromac Construction Inc.	*Non-compliant*	*Non-compliant*
G.S. Wark Limited	$6,521,795.00*	$5,873,078.40
M.J. Dixon Construction Limited	$7,382,290.00	$6,647,980.80
Van Horne Construction Ltd.	$7,364,267.63	$6,631,751.10

*G.S. Wark Limited's tender submission was further reduced from $6,554,000.00 (including hst), to $6,521,795.00 (including hst), due to acceptance of the separate provisional price credit – Removal of Flooring Work Noted on Drawing A2-500 (removing porcelain tile flooring in the bulk of the administration portion of the station and replacing it with polished concrete) as Alternate Pricing ~ -$28,500.00 (excluding hst).

The submission from Bromac Construction Inc. was deemed non-compliant as the Form of Tender did not meet the requirements in the 'Special Instructions to Bidders' and 'Agreement to Bond' sections of the Tender, as per the Town of Fort Erie's Purchasing By-law (By-Law No. 2-10, a By-law Respecting the Purchase of Goods, Services and Construction).

The recommended bidder by Raimondo & Associates Architects Inc. was G.S. Wark Limited, of Hamilton, Ontario, as they were the lowest bidder who met Tender requirements/specifications.

Financial/Staffing Implications and Accessibility (AODA) Implications

Total project funds approved for this project are $3,915,000.00. A summary of the estimated Total Project Costs Budgeted and Expensed to Date (Table 3), and Building and Sitework Costs (Table 4), Design Changes/Unexpected Costs (Table 5), and Funding Sources (Table 6) are noted on the following 3 pages:

Table 3: Estimated Project Costs Budgeted and Expensed to Date

Project Funding	Capital Budget	Transactions TO DATE	Upon Tender Acceptance & *TBD	Estimated Budget Variance
Acquisition of Land	$315,000	$325,437	-	-$10,437
Engineering	$250,000	$196,343	$110,555	-$56,898
Construction Contracts	$3,300,000	-	$5,873,079	-$2,573,079
Equipment Acquisitions	$50,000	-	50,000*	-
TOTALS	$3,915,000	$521,780	$6,033,634	-$2,640,414
		Project Costs	$6,555,414	

All amounts include non-rebated HST

As noted previously, the tender price received from G.S. Wark Limited was further reduced by acceptance by the Town of the separate provisional price credit – Removal of Flooring Work Noted on Drawing A2-500 (removing porcelain tile flooring in the bulk of the administration portion of the station and replacing it with polished concrete) as Alternate Pricing ~ -$28,500.00 (excluding hst).

Increased Square Footage Requirements and Costs

In the accepted Request for Proposal from Raimondo and Associates Inc. # FS-19P-FSTN19 for Architectural Services for the Design of Fire Station #4 received September 17, 2019, they outlined that in recent tendered experiences with projects of a similar typology realized sq. ft. numbers in the range of $200.00 - $250.00 sq. ft. They anticipated that the $3.9 million staff budgeted for the project would be adequate.

The Draft Class 3 Estimate prepared by Marshall & Murray Incorporated for Raimondo & Associates in the Spring of 2020 came in at a total projected construction cost of $5,471,351, and revealed that pricing costs of non-residential buildings had increased substantially from the onset of this project, and from the estimate outlined in Raimondo and Associates Inc. # FS-19P-FSTN19 proposal . It is estimated that construction costs have increased 35-40% since the commencement of the Central Fire Station build in 2012.

The Draft Class 3 Estimate identified the required square footage for the new Fire Station 4 to be approximately 12,281.74 (12,282) sq. ft., an increase of 3,282 sq. ft.

from the original estimated 9,000 sq. feet identified at the onset of the project. Square footage costs also increased to $355.27 sq. ft. in the estimate for the building, an increase of $5.27 from the estimated sq. ft. cost in the initial budget of $350.00. Increases in the required square footage, and cost per sq. ft. resulted in a cost increase of $1,290,130 (including non-rebatable hst). Site landscaping costs – which include grading rough and final, site drainage, cut and fill, and clearing, not fully accounted for in the funding strategy submitted at the June 18, 2018 Council and the approved Fire Station Capital Budget of March 5, 2019, accounted for an additional cost of $977,518 (including non-rebatable hst).

For comparison purposes, the City of Niagara Falls has contracted to build a 13,500 sq. ft. fire station for $7,475,000 with building hard construction costs of $4,880,000 ($361.48 sq. ft.).

A summary of the above-mentioned increased construction costs for the new Station 4 build since 2018/2019 are noted in Table 4 below:

Table 4 ~ Building and Site Works Estimates Onset Project

Estimated sq. ft Required for Building at Onset 9,000.00 sq. ft. $350.00 per sq. ft. June 18, 2018	Funds for Building / Site Development & Landscaping	Cost 3 Estimate 12,281.74 sq. ft. $355.27 per sq. ft. February 25, 2020	Site Dev. & Landscaping Not Estimated	Cost Increase for Building & Site Dev. & Landscaping
3,150,000	$3,150,000	$4,440,130		-$1,290,130
	$150,000		$1,127,518	-$977,518
total	$3,300,000		**TOTALS**	-$2,267,648

Amounts include non-rebatable hst

Reductions in Design Requirements to Reduce Project Costs and Unexpected Projected Costs

At the request of the Mayor at the August 26, 2020 Corporate and Community Services Business Sub-Committee Meeting, the Fire Chief consulted with the architect, Raimondo and Associates Inc. to find design cost savings.

Prior to going to tender, staff eliminated, reduced, or deferred the following building and chattel components to reduce costs:

- Hydrant and required metering and supply on the southside of the station - deferred;
- Gym equipment - deferred;
- Hotsy steam washer - eliminated;
- Internal training features ~ ladder and search props ~ lowered ceiling - reduced;
- Security features ~ fobbing - reduced; and
- Compressor and associated piping for vehicle maintenance - eliminated.

Further design reductions could not be explored due to WSIB, and Occupational Health and Safety Act legislative requirements. Fire station designs should have a hot, warm, and cold zone to prevent firefighter exposure to arsenic, hydrocarbons, benzene, and other carcinogens that can collect on their turnout gear and equipment. The gear and equipment is brought back to the station (hot zone), which is what affects the requirement for the specific design of the fire station. The 'cold zone' is where the contamination must be kept out – offices, gym, and kitchen. The 'warm zone' also referred to the transition zone, is where firefighters transition from the hot to cold zones – truck bays, and showers. These design requirements lead to reduced firefighter exposure and reduced firefighter WSIB presumptive legislation claims.

Unexpected project costs were also relayed to the architect in the summer of 2020, after the design was completed.

A summary of the design cost reductions, as well as unexpected extra costs are noted in Table 5 below:

Table 5 ~ Design Changes & Unexpected Costs Prior to Tendering

Design Change	Approximate Cost Savings	Unexpected Costs
Elimination of four-fold style doors at the front of the station in exchange for overhead doors	$179,097.60	
Reduction in overhead space allowing for removal of HVLS destratification fan	$15,264.00	
Removal of pre-engineered steel apparatus structure and replacement with truss structure	$21,369.60	
Removal of side driveway including curbs, stone, pavement, and light standard	$53,424.00	
Change in ground-breaking date from the winter to the spring, removing the requirement for winter proofing and heating the construction site, removing "risk adverse" conditions which lead to increased pricing costs	$350,000.00	
Poor site soils ~ removal of soil underneath footing to be replaced with lean concreate mix as a result of site geotechnical works Removal of unstable soil under reminder of station to be filled with compacted engineered fill		-$95,043.84
Addition of front barrier free parking area as per AODA requirements provided after the design was complete		-$17,458.96

Table 5 cont'd ~ Design Changes & Unexpected Costs Prior to Tendering

Design Change cont'd	Approximate Cost Savings	Unexpected Costs
Facility was made pandemic proofed including vestibules at the front and back doors, touchless toilets, doorways, etc.		*Unknown*
All amounts include non-rebated HST **Totals**	**$619,155.20**	**-$112,502.80**

Architectural design revisions by Raimondo and Associates were completed for an additional fee of $24,918.99 included in the Engineering costs referenced in Table 3.

Funding Sources

Table 6: Available Funding Source

Funding Source	Funds
Fire Station Reserve	$550,000
Fire Equipment Reserve	$250,000
Facilities Maintenance Reserve	$615,000
Transfers from Development Charges (DC) Reserves	$700,000
Land Sale ~ 398 Ridge Road (appraisal date: June 15, 2018)	$200,000
Land Sale ~ 271 Ridgeway Road (appraisal date: June 6, 2018)	$200,000
Forecasted Debenture	$1,400,000
TOTAL PROJECT FUNDS AVAILABLE	$3,915,000

All amounts include non-rebated HST

Variance Projection

Table 7: Variance Projection

Project FSTN19 Variance		
Estimated Project Cost	**Total Project Funds**	**Variance (rounded up)**
$6,555,414	**$3,915,000**	**-$2,650,000**

As noted in Table 7, there is a projected negative variance for this project in the amount of -$2.65 million after rounding.

The Development Charges Reserve funding of $700,000 was based on a preliminary net increase in eligible fire station space that has since been reduced, such that the available Development Charges Reserve funding should be reduced by $325,000.

The budgeted Land Sales funding of $400,000 in Table 6 is proposed to be increased by $325,000 based on appraised land values totaling $725,000.

With the above two funding changes offsetting each other, the funding gap from Table 7 remains at $2,650,000 and is recommended to be funded with an increase in debentures. The annual levy impact for $1.4M debt with a 10-year term at 2.50% in the 2020 Budget was forecasted to be $158,000 per year. Using the increased debt above totaling $4.05M combined with a lower interest rates of 1.60% results in an additional increase to the annual budget of $280,000, or a 1% of the total levy. It's expected that the debt will not be issued until 2022 when the project is complete, with interest costs beginning in 2022 and principal thereafter.

Expected amalgamation will reduce annual operating costs for required improvements, and repairs to the 2 existing stations by $90,000, offsetting the impact to the levy. Three major upcoming repairs for Station 4 are: masonry repairs, overhead door replacements, and a roof membrane overlay – at a projected cost of $115,000. Three major upcoming repairs for Station 6 are: flooring replacement, a roof membrane overlay, and parking-lot repaving – at a projected cost of $160,000.

The variance is a result of increased construction costs since the estimated budget request at the June 18, 2018 Council, and the approved Capital Project of March 2019. Looking back, the original estimate may have been too low.

Funds not expended during the project will be returned to the appropriate reserve account(s).

Staff have considered accessibility impacts and do not expect any new permanent barriers will be created to the proposed works. Should the construction activities cause a temporary disruption to normal service, the public will be notified as outline in the Accessibility Regulations for Contracted Services instruction to the contract.

Policies Affecting Proposal

By-law No. 124-2019 adopted Council's 2018-2022 Corporate Strategic Plan. Effective and sustainable infrastructure is a priority in the plan. The award and completion of this project supports the ongoing Infrastructure Priority in addressing the initiatives.

The provisions of the Town of Fort Erie's Purchasing By-law (By-Law No. 2-10, a By-law Respecting the Purchase of Goods, Services and Construction) were adhered to during the tender process for this project.

Workplace Safety and Insurance Act, 1997, as amended, *Sections 2(1), 15, 15.1(4), 15.1(5), 15.1(6), 15.2, 94, 183.*

Occupational Health and Safety Act, O. Reg. 253/07: Firefighters, as *amended.*

Relation to Fort Erie Fire & Emergency Services 2021-2030 Strategic Plan

Strategic Priority 2: Leveraging research, and technology to improve service delivery.
Strategic Objective: Maintain an innovative workplace focused on service excellence.
Strategic Action 2.4: Develop, and align services to meet evolving needs.

Comments from Relevant Departments/Community and Corporate Partners

Fort Erie Fire Department firefighters and staff along with the Town of Fort Erie's Corporate Services and Infrastructure Services Departments were consulted throughout the pre-qualification and tender processes.

Communicating Results

Both affected station personnel/firefighters were involved in the planning/design, and subsequent revisions to the new Fire Station 4. Affected firefighters will be kept appraised of the progress in conjunction with administrative amalgamation activities that will be taking place leading up to their transfer into the new station.

Staff will also keep the general public, and Council informed of construction works prior to, during and at the end of the construction. Should Raimondo and Associates Architects Inc. be awarded contract administration and inspection services, they will be providing weekly updates to the Fire Chief.

The work included in the project is anticipated to be done with the contractor maintaining one lane for traffic using appropriate traffic control, in accordance with Ontario Traffic Manual Book 7 – Temporary Conditions. There may be instances where a temporary road closure is required to allow specific work to be completed. Should this be necessary, appropriate notice will be provided to the local residents.
If Council approves this award now, the project is anticipated to begin in March, 2021, and be essentially complete by December 2021.

The following points of contact will be completed for the project:

- Hand delivered notices will be provided to the directly impacted residents.

Alternatives

Council has the option of not authorizing the award of this contract, and postponing the construction of Fire Station 4. However, given that the need to construct a new station and merge current station 4 and 6 have been identified (FES-01-2018 and CS-21-2017) a funding strategy was approved (FES-03-2018), land was purchased (By-law No. 79-2019), expenses incurred: geotechnical works, arborist report, telecommunication estimates, pre-qualification exercise, architectural services for revisions, and completion of the design (FES-06-2019) and tendering of this project (FEFD-20T-FSTN19), a total of $521,780 expensed to date, staff does not recommend deferring this project. Any delay of this award will affect the construction schedule, which is already tight.

There is also the consideration of maintenance costs for required improvements and repairs to the 2 existing stations. Through the Town's Facility Condition Assessment Study prepared by Cion Coulter Corp. (ISF-17P-FCAS17) in 2017, capital works were identified for Station 4 - $454,000 and Station 6 - $318,000 over the next 15 years.

Staff also foresee construction costs continuing to escalate over the coming years, increasing the cost of a new station build. Town staff does not recommend deferring this project for the above-mentioned reasons.

Council may also consider funding alternatives to supplement the project to minimize debt. Staff do not recommend this as it allows existing capital reserves to be prioritized for intended use and also takes advantage of relatively low debt interest rates.

Conclusion

Council authorizes the extension of the Raimondo and Associates Architects Inc. (F. Emilio Raimondo, President) assignment for contract administration and inspection services in the amount of $122,766.03 (including 13% HST); and further

Council amends the 2020 Capital Budget to supplement the Fort Erie Fire Department – New Station No. 4 – Contract No. FEFD-20T-FSTN19 by $2,650,000, with an increase in Debentures ($2,650,000), and Land Sales ($325,000.00), and a decrease in Development Charges Reserve Funding ($325,000); and further

Council accepts and approves the tender submission for the Fort Erie Fire Department – New Station No. 4 - Contract No. FEFD-20T-FSTN19, a Stipulated Price Contract from G.S. Wark Limited (Craig Hambly, President), as recommended by Raimondo and Associates Architects Inc., in the amount of $6,521,795.00 (including 13% HST).

Attachments

Appendix 'A' ~ Station Rendition

TOWN OF FORT ERIE FIRE DEPARTMENT STATION No.4
TEST AYOUR SMOKE DETECTORS
RAIMONDO + ASSOCIATES ARCHITECTS INC.

The Municipal Corporation of the Town of Fort Erie

By-law No. 12-2021

Being a By-law to Adopt the General Capital Budget and the General Levy Operating Budget for the Town Of Fort Erie for the Year 2021

Whereas Section 290 of the *Municipal Act, 2001*, S.O. 2001, c. 25 as amended, provides that a local municipality shall in each year prepare and adopt a budget including estimates of all sums required during the year for the purposes of the municipality; and

Whereas By-law No. 127-2020 was passed by the Municipal Council of The Corporation of the Town of Fort Erie, to adopt the Preliminary Capital Budget for the year 2021; and

Whereas Report No. CBC-01-2021 was approved, as amended, at the Council-in-Budget Committee Meeting held November 18, 2020, to defer approval of the balance of the 2021 Capital Budget to the review of the 2021 General Levy Operating Budget, and to approve the exclusion of amortization from the 2021 General Levy Operating Budget as required by Ontario Regulation 284/09; and

Whereas Report No. CBC-06-2021 was approved at the Council-in-Budget Committee Meeting held on February 3, 2021 to further amend Appendix "2" to Report No. CBC-01-2021; and

Whereas Report No. CBC-06-2021 was approved at the Council-in-Budget Committee Meeting held on February 3, 2021, to approve the Town's General Levy and supplementary budget, and to exclude capital asset amortization from the 2021 General Levy Operating Budget; and

Whereas public notice of the budget meeting schedule and by-law adoption was given in accordance with Public Notice Policy By-law No. 206-07; and

Whereas it is deemed desirable to adopt the General Capital Budget and the General Levy Operating Budget for the Town of Fort Erie for the Year 2021 as provided herein;

Now Therefore the Municipal Council of The Corporation of the Town of Fort Erie enacts as follows:

1. **That** the 2021 General Capital Budget for the Town of Fort Erie attached as Schedule "A" and forming part of this by-law, is approved and adopted.
2. **That** the 2021 General Levy Operating Budget for the Town of Fort Erie attached as Schedule "B" and forming part of this by-law, is approved and adopted.

3. **That** the Clerk of the Town is authorized to effect any minor modifications corrections or omissions solely of an administrative, numerical, grammatical, semantical or descriptive nature to this by-law or its schedules after the passage of this by-law.

Read a first, second and third time and finally passed this 22nd day of February, 2021.

Mayor

Clerk

I, Carol Schofield, the Clerk, of The Corporation of the Town of Fort Erie certifies the foregoing to be a true copy of By-law No. 12-2021 of the said Town. Given under my hand and the seal of the said Corporation, this day of , 2021.

_____

CORPORATION OF THE TOWN OF FORT ERIE
GENERAL CAPITAL BUDGET

Run Date: 2/5/21 3:46 PM

		2021 Budget	Reserves	Development Charges	Gas Tax	Debenture	Donations & Other Contributions	Fed/Prov Reg/ Grants
ACTIVE CAPITAL								
INFRASTRUCTURE SERVICES								
Roads Capital								
ARTH20	Arthur Street Upgrade - G3	594,575	297,287	297,288				
BOWW19	Bowen Road Watermain Replacement	111,000	111,000					
BURB15	Burbank Terrace Watermain Replacement	82,000	82,000					
BURG21	Burger Road Repairs	300,000	300,000					
DOMI21	Dominion Road Reconstruction - Regional	160,000	160,000					
GRRP21	Guide Rail Replacement	75,000	75,000					
LIND20	Lindbergh Dr Watermain & Sanitary Sewer	386,000	386,000					
NIGH20	Nigh Road Upgrade - R1	823,732	411,866	411,866				
OTTR21	Ott Road Upgrade - S5 - Tracks to West M	25,770	12,885	12,885				
OTTW24	Ott Road Watermain Replacement	15,000	15,000					
PARR20	Pt. Abino Road South Reinstatement of the	347,750	347,750					
RRSI21	Bertie & Concession Signal Rebuild	280,000	280,000					
RSRF21	2021 Road Resurfacing Program	1,300,000	1,300,000					
WILD21	Wildwood Avenue Drainage Improvements	24,000	24,000					
WOMS21	Maintenance Work Order Management Sys	43,750	43,750					
Total Roads Capital		4,568,577	3,846,538	722,039				
Sidewalk Capital								
SIDE21	2021 Sidewalk Repair Program	200,000	200,000					
Total Sidewalk Capital		200,000	200,000					
Storm Sewer Capital								
ARTH20	Arthur Street Upgrade - G3	413,100		413,100				
LIND20	Lindbergh Dr Watermain & Sanitary Sewer	353,000	353,000					
NIGH20	Nigh Road Upgrade - R1	817,168	408,584	408,584				
OTTR21	Ott Road Upgrade - S5 - Tracks to West M	32,490	16,245	16,245				
WILD21	Wildwood Avenue Drainage Improvements	15,000	15,000					
WOMS21	Maintenance Work Order Management Sys	43,750	43,750					
Total Storm Sewer Capital		1,674,508	836,579	837,929				
Municipal Drain Capital								
BAYD24	Bay Beach Municipal Drain	160,000	80,000				80,000	
KEEL21	Keelsville Drain	60,000	30,000				30,000	
Total Municipal Drain Capital		220,000	110,000				110,000	
Wastewater Capital								
ARTH20	Arthur Street Upgrade - G3	349,350		349,350				
BOWW19	Bowen Road Watermain Replacement	274,000	274,000					
LIND20	Lindbergh Dr Watermain & Sanitary Sewer	870,000						870,000
WOMS21	Maintenance Work Order Management Sys	43,750	43,750					
Total Wastewater Capital		1,537,100	317,750	349,350				870,000
Water Capital								

CORPORATION OF THE TOWN OF FORT ERIE

GENERAL CAPITAL BUDGET

Run Date: 2/5/21 3:46 PM

		2021 Budget	Reserves	Development Charges	Gas Tax	Debenture	Donations & Other Contributions	Fed/Prov Reg/ Grants
BOWW19	Bowen Road Watermain Replacement	231,000	231,000					
BURB15	Burbank Terrace Watermain Replacement	137,000	137,000					
LIND20	Lindbergh Dr Watermain & Sanitary Sewer	707,000	500,260					206,740
OTTW24	Ott Road Watermain Replacement	49,000	49,000					
WOMS21	Maintenance Work Order Management Sy	43,750	43,750					
Total Water Capital		1,167,750	961,010					206,740
Total INFRASTRUCTURE SERVICES		9,367,935	6,271,877	1,909,318			110,000	1,076,740
Total ACTIVE CAPITAL		9,367,935	6,271,877	1,909,318			110,000	1,076,740
Total General Approval		9,367,935	6,271,877	1,909,318			110,000	1,076,740

Run Date: 2/8/21 11:26 AM

CORPORATION OF THE TOWN OF FORT ERIE
2021 BUDGET AND FORECAST

	2020 YTD Actuals	2020 Approved Budget	2021 Budget	2022 Forecast	2023 Forecast
Revenue					
General Levy	(28,840,679)	(28,632,998)	(29,358,135)	(30,087,384)	(31,106,388)
BIA Levies	(58,209)	(58,500)	(90,709)	(90,709)	(90,709)
Payments in Lieu of Taxes	(272,514)	(275,120)	(278,457)	(278,458)	(278,458)
Donations	(5,853)	(5,274)	(7,825)	(15,100)	(15,100)
Fine Revenue	(171,399)	(250,600)	(212,260)	(270,600)	(272,600)
Gaming Revenues	(118,136)	(244,500)	(101,500)	(204,000)	(204,000)
Grants	(3,361,692)	(2,121,133)	(2,097,609)	(1,872,349)	(1,662,202)
Interest & Penalties	(1,131,989)	(1,362,000)	(978,685)	(951,685)	(951,685)
Sale of land, buildings and equipment	(49,076)	(115,000)	(120,000)	(120,000)	(120,000)
User Fees	(2,638,234)	(2,953,189)	(2,402,205)	(3,107,976)	(3,098,963)
Miscellaneous other revenues	(81,776)	(91,725)	(110,154)	(140,104)	(140,240)
Total Revenue	(36,729,557)	(36,110,039)	(35,757,539)	(37,138,365)	(37,940,345)
Expenses					
Wages & Benefits	14,243,407	14,990,365	15,481,216	15,707,795	15,982,653
Materials & Services	8,442,425	11,157,303	11,591,296	11,218,978	11,437,762
Debt Interest Charges	48,176	87,319	72,188	67,869	57,858
Grants	1,734,909	1,900,257	1,941,965	1,945,421	3,891,586
Partnership Programs	107,984	236,000	121,000	121,000	111,000
Total Expenses	24,576,901	28,371,244	29,207,665	29,061,063	31,480,859
NET BEFORE FINANCING AND TRANSFERS	12,152,656	7,738,795	6,549,874	8,077,302	6,459,486
FINANCING & TRANSFERS					
Interdepartmental transfers					
Fleet Related Charges	(235,826)	(356,323)	(355,028)	(362,068)	(365,820)
Allocation of Gaming Revenues	0	0	0	0	0
Program Support Charges	(557,977)	(557,977)	(519,345)	(537,050)	(556,072)
Total Interdepartmental transfers	(793,803)	(914,300)	(874,373)	(899,118)	(921,892)
Debt principal (advances)/repayments					
Repayment of Debt	545,824	545,824	558,740	572,307	717,665
Total Debt principal (advances)/repayments	545,824	545,824	558,740	572,307	717,665
Reserve and Capital Fund Transfers					
Transfers from reserves	(391,029)	(1,134,500)	(2,297,846)	(696,000)	(2,352,000)
Transfers to reserves	10,886,903	9,548,390	9,277,353	9,175,113	9,094,713
Transfers to Capital Fund	3,452	0	0	0	0
Transfers Development Chgs Reserve	(45,000)	(280,500)	(100,000)	(75,000)	(79,000)
Total Reserve and Capital Fund Transfers	10,454,326	8,133,390	6,879,507	8,404,113	6,663,713
NET FINANCING & TRANSFERS	10,206,347	7,764,914	6,563,874	8,077,302	6,459,486
(SURPLUS)/DEFICIT CARRYFORWARD					

CORPORATION OF THE TOWN OF FORT ERIE
2021 BUDGET AND FORECAST

	2020 YTD Actuals	2020 Approved Budget	2021 Budget	2022 Forecast	2023 Forecast
General (surplus) deficit	(27,801)	(26,119)	(14,000)	0	0
Total (SURPLUS)/DEFICIT CARRYFORWARD	(27,801)	(26,119)	(14,000)	0	0
DEPARTMENT NET REVENUE /(EXPENDITURE)	1,974,110	0	0	0	0
Reconciliation to Accrual Basis					
Reserve and Capital Fund Transfers					
Transfers from reserves	(391,029)	(1,134,500)	(2,297,846)	(696,000)	(2,352,000)
Transfers to reserves	10,886,903	9,548,390	9,277,353	9,175,113	9,094,713
Transfers to Capital Fund	3,452	0	0	0	0
Transfers Development Chgs Reserve	(45,000)	(280,500)	(100,000)	(75,000)	(79,000)
Total Reserve and Capital Fund Transfers	10,454,326	8,133,390	6,879,507	8,404,113	6,663,713
Debt principal (advances)/repayments					
Repayment of Debt	545,824	545,824	558,740	572,307	717,665
Total Debt principal (advances)/repayments	545,824	545,824	558,740	572,307	717,665
Accrual Entries					
Amortization	(3,152,072)	(6,106,600)	(6,304,400)	(6,304,400)	(6,304,400)
Total Accrual Entries	(3,152,072)	(6,106,600)	(6,304,400)	(6,304,400)	(6,304,400)
ACCRUAL BASIS SURPLUS/(DEFICIT)	9,822,188	2,572,614	1,133,847	2,672,020	1,076,978

The Municipal Corporation of the Town of Fort Erie

By-law No. 13-2021

Being a By-law To Authorize the Entry into and Execution of a Letter of Agreement with Her Majesty the Queen in right of the Province of Ontario Represented by the Minister of Transportation under the Dedicated Gas Tax Funds for Public Transportation Program

Whereas the Province of Ontario through the Ministry of Transportation has established the Dedicated Gas Tax Funds for Public Transportation Program, and

Whereas the Ministry of Transportation has advised that the Town of Fort Erie is eligible to receive a maximum amount of up to Two Hundred and Ninety-three Thousand Three Hundred and Seventy-nine Dollars ($293,379.00) for the 2020/2021 Program, and

Whereas in order to receive the said funds, the Municipality must enter into a Letter of Agreement with the Province of Ontario;

Now therefore the Municipal Council of The Corporation of the Town of Fort Erie enacts as follows:

1. **That** the entry into a Letter of Agreement with Her Majesty the Queen in right of the Province of Ontario, as represented by the Minister of Transportation to receive funding to a maximum amount of up to Two Hundred and Ninety-three Thousand Three Hundred and Seventy-nine Dollars ($293,379.00) under the Dedicated Gas Tax Funds for Public Transportation Program – 2020/2021 Program is authorized and approved.

2. **That** the Mayor and Director, Corporate Services/Treasurer are authorized and directed to execute the Letter of Agreement, in a form satisfactory to the Town Solicitor, and to affix the corporate seal thereto.

3. **That** the Clerk of the Town is authorized to effect any minor modifications, corrections or omissions solely of an administrative, numerical, grammatical, semantical or descriptive nature to this by-law or its schedules after the passage of this by-law.

Read a first, second and third time and finally passed this 22nd day of February, 2021.

_____
Mayor

_____
Clerk

I, Carol Schofield, the Clerk, of The Corporation of the Town of Fort Erie certifies the foregoing to be a true copy of By-law No. 13- 2021 of the said Town. Given under my hand and the seal of the said Corporation, this day of , 20 .

_____

The Municipal Corporation of the Town of Fort Erie

By-law No. 14-2021

Being A By-law To Enact An Amendment To The Official Plan Adopted By By-law No. 150-06 For The Town Of Fort Erie Planning Area

Amendment No.48
Jason Pizzicarola- Agent
Frank Kenneth DiCorso– Owner

0-6489 Nigh Road

350302-0120

The Municipal Council of the Corporation of the Town Of Fort Erie in accordance with the provisions of Section 17 of the Planning Act R.S.O. 1990 enacts as follows:

1. **That** amendment No. 48 to the Official Plan for the Town of Fort Erie consisting of the attached explanatory text is hereby adopted and approved.

2. **That** this by-law shall come into force and take effect on the day of the final passing thereof.

3. **That** the Clerk of the Town of Fort Erie is authorized to effect any minor modifications, corrections or omissions solely of an administrative, numerical, grammatical, semantical or descriptive nature to this by-law or its schedules after the passage of this by-law.

Read a first, second and third time and finally passed this 22nd day of February 2021.

_____
Mayor

_____
Clerk

I, Carol Schofield, the Clerk, of The Corporation of the Town of Fort Erie hereby certify the foregoing to be a true copy of By-law No. 41-2019 of the said Town. Given under my hand and the seal of the said Corporation this ____ day of _____,20

AMENDMENT NO. 48

TO THE

OFFICIAL PLAN

FOR THE

CORPORATION OF THE TOWN OF FORT ERIE

CONTENTS

PART "A" - THE PREAMBLE

Section 1 - Title and Components

Section 2 - Purpose of Amendment

Section 3 - Location of this Amendment

Section 4 - Basis of this Amendment

Section 5 - Implementation and Interpretation

PART "B" - THE AMENDMENT

Introductory Statement

Details of the Amendment

Schedule "A" - Land Use Plan

PART "C" - THE APPENDICES

Appendix 1 - Notice of Public Information Processes

Appendix 2 - Public Meeting Minutes

Appendix 3 - Circulation Comments

PART "A" - THE PREAMBLE

SECTION 1

TITLE AND COMPONENTS

This document, when approved in accordance with Sections 17 and 21 of The Planning Act, 1990, shall be known as Amendment No. 48 to the Official Plan adopted by By-law No. 150-06 of the Fort Erie Planning Area.

Part "A", the Preamble does not constitute part of this amendment.

Part "B", the Amendment, consisting of the following text and map (designated Schedule "A") constitutes Amendment No. 48 to the Official Plan adopted by By-law No. 150-06 for the Fort Erie Planning Area.

Also attached is Part "C", the Appendices, which do not constitute part of this amendment. These Appendices (1 through 3 inclusive) contain the background data, planning considerations and public involvement associated with this amendment.

SECTION 2

PURPOSE OF THIS AMENDMENT

The purpose of this Amendment is to amend the infilling policy in Section 4.6.3 (a) of the Town's Official Plan as it applies to the lands shown in Schedule A and limit the development of the lands shown on Schedule "A" to facilitate the creation of three building lots to allow the construction of a single-detached dwelling on each lot.

SECTION 3

LOCATION OF THIS AMENDMENT

The lands, which are the subject of this amendment, are located at 0-6489 Nigh Road as shown on Schedule "A" attached hereto.

SECTION 4

BASIS OF THIS AMENDMENT

Subsection 13.7(III) of the Official Plan adopted by By-law No. 150-06 of the Fort Erie planning area provides that amendments may be made to the Official Plan. Policies in Subsection 13.7(III) have been considered in the preparation of this amendment and the following factors have been reviewed in supporting this amendment to the Official Plan:

a) The need for the proposed use:

The subject lands are designated Rural in the Town's Official Plan and current designation permits residential dwellings. The proposal is to create two new building lots and retain the balance of the property for a future single detached dwelling. The lands are not being farmed. The owner wishes to sever the lands to facilitate construction of two new single-detached dwellings. The two new lots will provide an opportunity for the people wishing to construct a single- detached dwelling on a Rural lot in Fort Erie.

b) The extent to which the existing areas in the proposed categories are developed, and the nature and adequacy of such existing development:

The subject lands are currently vacant. Rural Residential subdivisions and dwellings are located to the north, northwest, west and east of the subject property. There are several rural dwellings in the surrounding area.

c) The physical suitability of the land for such proposed use, and in the case of lands exhibiting or abutting a Natural Heritage feature, demonstration of compliance with the Natural Heritage policies of this plan:

All the three lots will be greater than 1 hectare with Part 1 being 2.6 hectares. The proposal has been reviewed by the Regional Private Sewage System staff and they have no objection to the proposed lot sizes.

A watercourse is located along the westerly portion of Part 1 and Significant Woodlands are located to the south of the subject property. To ensure the Significant Woodlands are not impacted by the proposed development, the applicant is proposing to rezone a 30 metre buffer along the south property line as Environmental Conservation Overlay.

d) The location of the area under consideration with respect to:

(i) the adequacy of the existing and proposed highway system in relation to the development of such proposed areas,
(ii) the convenience and accessibility of the site for vehicular and pedestrian traffic and the traffic safety in relation thereto, and
(iii) the adequacy of the potable water supply, sewage disposal facilities, and other municipal services in view of the policies contained in this Plan and in accordance with technical reports or recommendations of the Ministry of the

Environment and the Regional Niagara Health Services Department and any other appropriate authority deemed advisable;

The subject property fronts on Nigh Road which is a municipal road which is paved and municipally maintained. The proposed development will not generate any significant traffic volumes. The existing and proposed dwellings can be adequately serviced with private water systems. The Region has confirmed that the severed and retained lots are adequately sized to accommodate the private sewage systems and will ensure the adequacy of lot sizes for future lots through the requirement for a septic system design to be submitted for each lot at the consent stage.

e) The compatibility of the proposed use with uses in adjoining areas:

Adjacent uses consist of rural lands, rural residential uses and natural heritage features which are compatible with the existing and proposed uses of the subject property.

f) The effects of such proposed use on the surrounding area in respect of the minimizing of any possible depreciating or deteriorating effect upon adjoining properties:

There is no evidence to suggest that the introduction of two additional lots into the area will depreciate adjoining properties.

g) The potential effect of the proposed use on the financial position of the Municipality:

The proposed re-designation of the subject property will not negatively affect the financial position of the municipality as all the works associated with the proposed development are the responsibility of the developer. The proposed residential development will provide the municipality with additional tax base and development charges

h) The potential effect of the proposed use in relation to the intent and implementing regulations of the Environmental Protection Act.

None.

SECTION 5

IMPLEMENTATION AND INTERPRETATION

The relevant policies of the Official Plan adopted by By-law No. 150-06 of the Fort Erie planning area shall apply to the implementation and interpretation of this Amendment.

PART "B" - THE AMENDMENT

All of this part of the document entitled "Part "B" - “The Amendment" consisting of the following policies and attached maps designated as Schedule "A" (Land Use Plan) constitute Amendment No. 19 to the Official Plan adopted by By-law No. 150-06 for the Fort Erie Planning Area. The Official Plan adopted by By-law No. 150-06 for the Fort Erie Planning Area is hereby amended as follows:

1. Section 4.6.3 CONSENTS TO SEVER, subsection II (a) (b) shall not apply to the lands shown on Schedule “A” attached hereto and development shall be limited to three building lots. One lot will have lot area 2.6 hectares and the remaining two will have a lot area 1.1 hectare and minimum lot frontage of 90 metres each. No further development shall be permitted without an amendment to this Plan

PART “C” - THE APPENDICES

Appendix 1	-	Notice of Public Meeting
Appendix 2	-	Public Meeting Minutes
Appendix 3	-	Circulation comments

SCHEDULE "A"

By-law No. 14-2021
THIS SKETCH FORMS PART OF SCHEDULE "A" TO THE OFFICIAL PLAN
PASSED THIS 22nd DAY OF FEBRUARY, 2021

Subject Lands - 0-6489 Nigh Road

BERTIE CON 2 LE PT LOT 14 RP 59R6721 PARTS 1 TO 6

Planning and Development Services
Map Created February 12, 2021

Appendix "1"

NOTICE OF COMPLETE APPLICATION AND PUBLIC MEETING

Owner: –Frank Kenneth DiCorso

0-6489 Nigh Road

Official Plan and Zoning By-law Amendment Application

APPLICATION 350309-0471

DATE: **January 11, 2021**
TIME: **6:00 PM**
LOCATION: **This will be a virtual meeting**

Residents can participate in Zoom Council meetings two different ways:

1. Send your comments via e-mail to Anamika Dilwaria, Senior Development Planner (adilwaria@forterie.ca) who will provide them to Council.

2. Participate in the Zoom meeting (audio/video via web or by telephone) by sending an email to Anamika Dilwaria, Senior Development Planner (adilwaria@forterie.ca) to receive information on joining the Zoom meeting.

The Town of Fort Erie Council meeting live webcast will be streamed at www.youtube.com/townofforterie or click on the YouTube icon on the home page of the Town's website (www.forterie.ca).

LOCATION OF SUBJECT LANDS

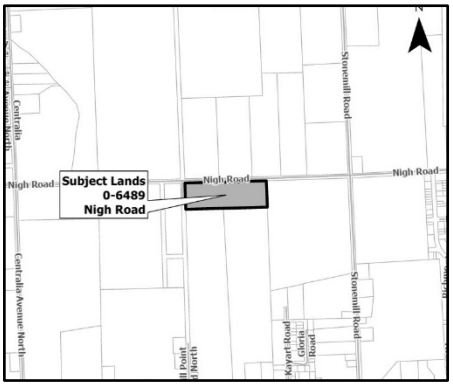

An Official Plan and Zoning By-law amendment are requested to facilitate a future severance to create two new residential lots (Survey Sketch attached as Schedule 1) on the lands known as 0 -6489 Nigh Road.

The lands are located outside the Urban Area and are currently designated Rural, in part and Environmental Protection, in part, in the Official Plan. The applicant is requesting an amendment to the Official Plan as the proposed lots do not comply with the definition of the infill lots outlined in the Plan. The Official Plan defines an Infilling lot as a "*new lot which fronts on a public road and which is situated on the same side of the road and between either an existing dwelling and another existing dwelling or a natural heritage feature or an improved road allowance where the distance between such structures or features is 90 metres or less*".

The lands are currently zoned Rural (RU) Zone, in part, Environmental Conservation (EC) Overlay Zone, in part and Hazard (H) Zone, in part, in accordance with the Zoning By-law 129-90. The site-specific RU regulations are requested for a reduction in the minimum lot frontage

and minimum lot area requirements of the by-law. The applicant is not proposing any changes to the Environmental Conservation (EC) Overlay Zone and Hazard (H) Zone.

GETTING MORE INFORMATION

Input on the combined Official Plan and Zoning By-law Amendment is welcome and encouraged. You can provide input by speaking at the public meeting or by making a written submission to the Town. Please note that unless you do one of the above now, you may not be able to appeal the decision later.

A copy of the Information/Recommendation Report will be available to the public by 5:00 PM on **January 6th, 2021.** The information/recommendation report will be available in the Council agenda portion of the Town's Web Site: www.forterie.ca or by contacting Anamika Dilwaria, Senior Development Planner.

CONTACT INFORMATION

Anamika Dilwaria, MCIP, RPP, Senior Development Planner
Planning and Development Services Department
Town Hall, 1 Municipal Centre Drive
Fort Erie, Ontario L2A 2S6
905-871-1600 ext. 2507
Or by e-mailing your comments to: adilwaria@forterie.ca

PROVIDING YOUR COMMENTS OR REQUESTING NOTICE OF DECISION

To provide input in writing, or to request written notice of the decision of the combined Official Plan and Zoning By-law Amendment, please send a letter c/o Carol Schofield, Manager, Legislative Services/Clerk, 1 Municipal Centre Drive, Fort Erie, Ontario, L2A 2S6 or an email to cschofield@forterie.ca

PLANNING ACT LEGAL NOTICE REQUIREMENTS

The Town of Fort Erie has not yet made a decision regarding this application.
After considering any written or oral comments at the public meeting, Council will make a decision. If you disagree with Council's decision on the Official Plan and Zoning By-law Amendment application, you can appeal it to the Local Planning Appeal Tribunal (LPAT).

If a person or public body would otherwise have an ability to appeal the decision of the Town of Fort Erie's Municipal Council to the Local Planning Appeal Tribunal but the person or public body does not make oral submissions at a public meeting or make written statements to the Town of Fort Erie before the by-law is passed, the person or public body is not entitled to appeal the decision.

If a person or public body does not make oral submissions at a public meeting, or make written submissions to the Town of Fort Erie before the by-law is passed, the person or public body may not be added as a party to the hearing of an appeal before the Local Planning Appeal Tribunal unless, in the opinion of the Tribunal, there are reasonable grounds to do so.

For more information about this matter, including information about appeal rights, please send a letter c/o Carol Schofield, Manager, Legislative Services/Clerk, 1 Municipal Centre Drive, Fort Erie, Ontario, L2A 2S6 or an email to cschofield@forterie.ca

Appendix"1"

SCHEDULE 1

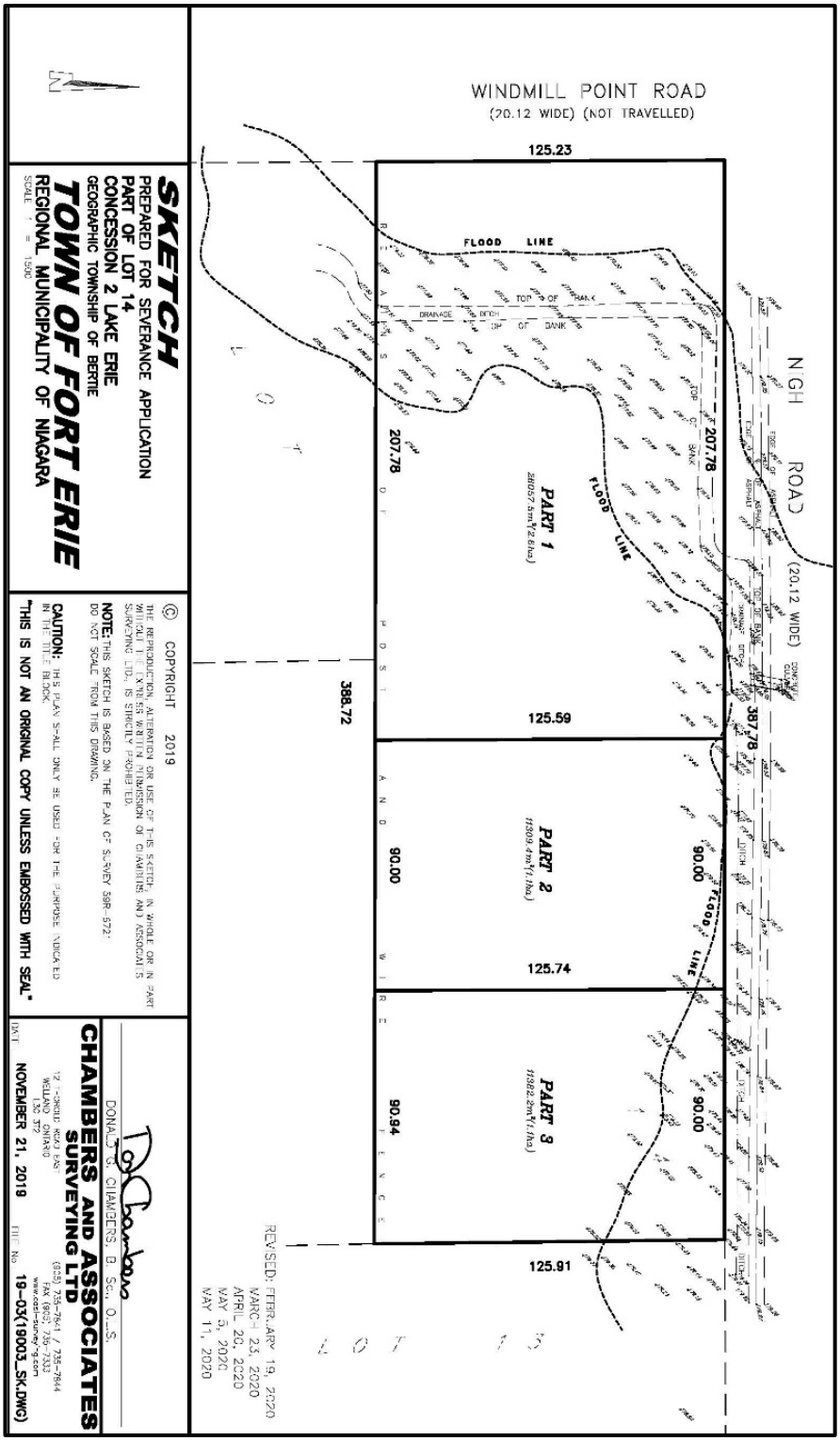

Interoffice Memorandum

April 9, 2020
File No. 350309-0471

To: Anamika Dilwaria, Senior Development Planner
From: Jeremy Korevaar, Coordinator, Development Approvals
Subject: **Application for Combined Official Plan and Zoning By-law Amendment - 0-6489 Nigh Road**

On behalf of the Infrastructure Services Department, Engineering Division, I have reviewed the proposed Combined Official Plan and Zoning By-law Amendment for 0-6489 Nigh Road and the supporting documentation and offer the following comments:

1. The development application indicates that the proposed amendment is being requested to facilitate a future severance application to create two new residential lots. The applicant is advised that we have conducted a preliminary review of the proposed severances and the following conditions will be recommended to the Committee of Adjustment:
   a. Official Plan Section 12.7 designates Nigh Road from Highway No. 3 to Rosehill Road as a Collector Road with a preferred road allowance width of 23.0m. The current road allowance width of Nigh Road is 20.1m, therefore a 1.45m road widening will be required; and
   b. A Master Lot Grading Plan for the residential lots shall be prepared by an Ontario Land Surveyor and provided for review and approval by the Town.

Given the foregoing comments, I offer no objections to the proposed amendments.

Jeremy Korevaar, C.E.T.
Coordinator, Development Approvals

cc: Tim Marotta, Manager, Engineering Division; Aaron Butler, Manager, Development Approvals; Spencer Pierce, Development Coordinator Technician

OPA & ZBA- 0 Nigh Road

Keegan Gennings to: Anamika Dilwaria 04/15/2020 09:27 AM

From: Keegan Gennings/FortErie
To: Anamika Dilwaria/FortErie@TownOfFortErie

To: ADilwaria@forterie.ca

Hi Anamika,

I have reviewed the application for the rezoning and official plan amendment for "0" Nigh Road (corner of Windmill Point Road) and have no comments.

Regards,

Keegan Gennings C.B.C.O
Chief Building Official
Town of Fort Erie
905-871-1600 ext. 2515

Re: Requerst for Comments- OPA & ZBA- 0 Nigh Road

Ed Melanson to: Anamika Dilwaria 04/08/2020 08:50 AM

From: Ed Melanson/FortErie
To: Anamika Dilwaria/FortErie@TownOfFortErie

	Anamika Dilwaria	Anamika Dilwaria	Requerst for Comments- OPA & ZBA- 0 Nigh Road
✓	Aaron Butler	Aaron Butler	
✓	Signe Hansen	Signe Hansen	
✓	Jeremy Korevaar	Jeremy Korevaar	
✓	Ed Melanson	Ed Melanson	

To: ADilwaria@forterie.ca

Good morning Anamika,

I have reviewed all of the attachments pertaining to the application for OPA and ZBA. I have no comments, questions or concerns specific to the FPPA, Ontario Fire code or the Fort Erie Fire Department.

Ed Melanson
Fire Chief & CEMC
Fort Erie Fire Department

Office: (905) 871-1600 ext. 2600
Cell: (905) 329-7255

Interoffice Memorandum

April 27, 2020
File No: 350309-471

To: Anamika Dilwaria, Senior Development Planner
From: Signe Hansen, Manager, Community Planning
Subject: **0 Nigh Road - Combined OPA & ZBA Application**

I have no comments relative to the application for an Official Plan Amendment and Zoning By-law Amendment for 0 Nigh Road.

I will have comments, when an application is submitted to severe the property, relative to cash-in-lieu of parkland, a tree inventory and preservation plan, and street trees.

Regards

Signe Hansen, OALA, CSLA, MBA
Manager, Community Planning
/sh

RE: Fwd: Request for Comments- Combined Official Plan and Zoning By-law Amendment Application - 0 Nigh Road

Jessica Abrahamse to: Jason Pizzicarola 09/10/2020 04:12 PM

Cc: "Anamika Dilwaria"

From: "Jessica Abrahamse" <jabrahamse@npca.ca>

To: "Jason Pizzicarola" <jp@jpdesign.ca>

Cc: "Anamika Dilwaria"<ADilwaria@forterie.ca>

Cara Lampman

Anamika Dilwaria

Cara Lampman

Jason Pizzicarola

Jessica Abrahamse

Hi Jason,

Please find the following comments regarding the cut and fill:

The NPCA has reviewed the 'Review Letter of Lot Grading - Proposed Severance' (stamped Aug. 26, 2020) by Robert E. Dale Limited. The NPCA requires that the section locations referred to in the calculations be indicated on the grading plan. Please revise accordingly.
Also noted - Nigh Road is overtopped by the 100 year flood elevation of 179.35m. It appears that the road has more than 300mm of flooding across the entire frontage of Part 2 and most of Part 3. As such, it will also be required to be demonstrated that safe access can be provided pursuant to NPCA policies.

With Best Regards,

Jessica Abrahamse M.E.S.
Watershed Planner

250 Thorold Road West, 3rd Floor
Welland, On
L3C 3W2
(905) 788-3135 Ext. 235
jabrahamse@npca.ca
www.npca.ca
NPCA Mapping Tool

Thank you for your email. Due to the COVID-19 pandemic, the NPCA has taken measures to protect staff and public while providing continuity of services. NPCA enforcement, permitting and planning functions are continuing to operate, however there may be delays in receiving responses to inquiries or complaints due to staff restrictions and remote work locations. Updates with regards to NPCA operations and activities can be found on our website at www.npca.ca/our-voice, the NPCA Facebook page at https://www.facebook.com/NPCAOntario and on Twitter at https://twitter.com/NPCA_Ontario.

For more information on Permits, Planning and Forestry please go to the Permits & Planning webpage at https://npca.ca/administration/permits.

For mapping on features regulated by the NPCA please go to our GIS webpage at https://gis-npca-camaps.opendata.arcgis.com/ and utilize our Watershed Explorer App or GIS viewer.

To send NPCA staff information regarding a potential violation of Ontario Regulation 155/06 please go to the NPCA Enforcement and Compliance webpage at https://npca.ca/administration/enforcement-compliance.

From: Jason Pizzicarola <jp@jpdesign.ca>
Sent: August 27, 2020 3:25 PM
To: Steve Miller <smiller@npca.ca>; Jessica Abrahamse <jabrahamse@npca.ca>
Cc: Anamika Dilwaria <ADilwaria@forterie.ca>; Kira Dolch <KDolch@forterie.ca>; fdicorso@gmail.com
Subject: RE: Fwd: Request for Comments- Combined Official Plan and Zoning By-law Amendment Application - 0 Nigh Road

Hi Steve and Jessica,
The civil engineer has prepared the attached document for the cut and fill as discussed with Cara Lampman.
Please let me know if this will suffice for the severances. If you have any questions regarding the report you can reach out to Geoff Dale at REDale directly.
Regards,
Jason

From: Cara Lampman <clampman@npca.ca>
Sent: Thursday, May 21, 2020 8:41 AM

APPENDIX "3"

To: Jason Pizzicarola <jp@jpdesign.ca>; Anamika Dilwaria <ADilwaria@forterie.ca>
Subject: RE: Fwd: Request for Comments- Combined Official Plan and Zoning By-law Amendment Application - 0 Nigh Road

Hi Jason,

The NPCA has reviewed the survey sketch and is satisfied that it is accurate. However, I did reach out to the Town to discuss the application as based on the updated floodlines the NPCA is not in a position to support the proposed lot creation.

NPCA and Provincial Policy Statement do not allow lot creation within a flood hazard. Additionally safe access needs to be confirmed to all lots and the NPCA will require the floodplain in its entirety be zoned to Hazard to limit all future development and site alteration within its boundaries.

There may be an opportunity for a cut and fill to bring the lands along the road above the floodplain elevation but that will require an Engineering Report and calculations.

I am happy to set up a zoom meeting to discuss further if you think that would be helpful.

Cara Lampman
Senior Watershed Planner
Niagara Peninsula Conservation Authority (NPCA)
250 Thorold Road West, 3rd Floor | Welland, ON L3C 3W2
Tel: 905-788-3135 | extension 272
clampman@npca.ca
www.npca.ca

Thank you for your email. Due to the COVID-19 pandemic, the NPCA has taken measures to protect staff and public while providing continuity of services. NPCA enforcement, permitting and planning functions are continuing to operate, however there may be delays in receiving responses to inquiries or complaints due to staff restrictions and remote work locations. Updates with regards to NPCA operations and activities can be found on our website at www.npca.ca/our-voice, the NPCA Facebook page at https://www.facebook.com/NPCAOntario and on Twitter at https://twitter.com/NPCA_Ontario.

For more information on Permits, Planning and Forestry please go to the Permits & Planning webpage at https://npca.ca/administration/permits.

For mapping on features regulated by the NPCA please go to our GIS webpage at https://gis-npca-camaps.opendata.arcgis.com/ and utilize our Watershed Explorer App or GIS viewer.

https://npca.ca/administration/permits.

For mapping on features regulated by the NPCA please go to our GIS webpage at https://gis-npca-camaps.opendata.arcgis.com/ and utilize our Watershed Explorer App or GIS viewer.

To send NPCA staff information regarding a potential violation of Ontario Regulation 155/06 please go to the NPCA Enforcement and Compliance webpage at https://npca.ca/administration/enforcement-compliance.

From: Steve Miller <smiller@npca.ca>
Sent: May 6, 2020 2:55 PM
To: Cara Lampman <clampman@npca.ca>
Subject: RE: Fwd: Request for Comments- Combined Official Plan and Zoning By-law Amendment Application - 0 Nigh Road

Hey Cara;

The 100 year flood elevation is not shown correctly across the frontage of Parts 2 and 3. The flood elevation should by 179.36m here. The flood elevation of 178.46m appears to be shown correctly across the frontage of Part 1.

As such, the topo survey needs to be revised.

Cheers!

APPENDIX "3"

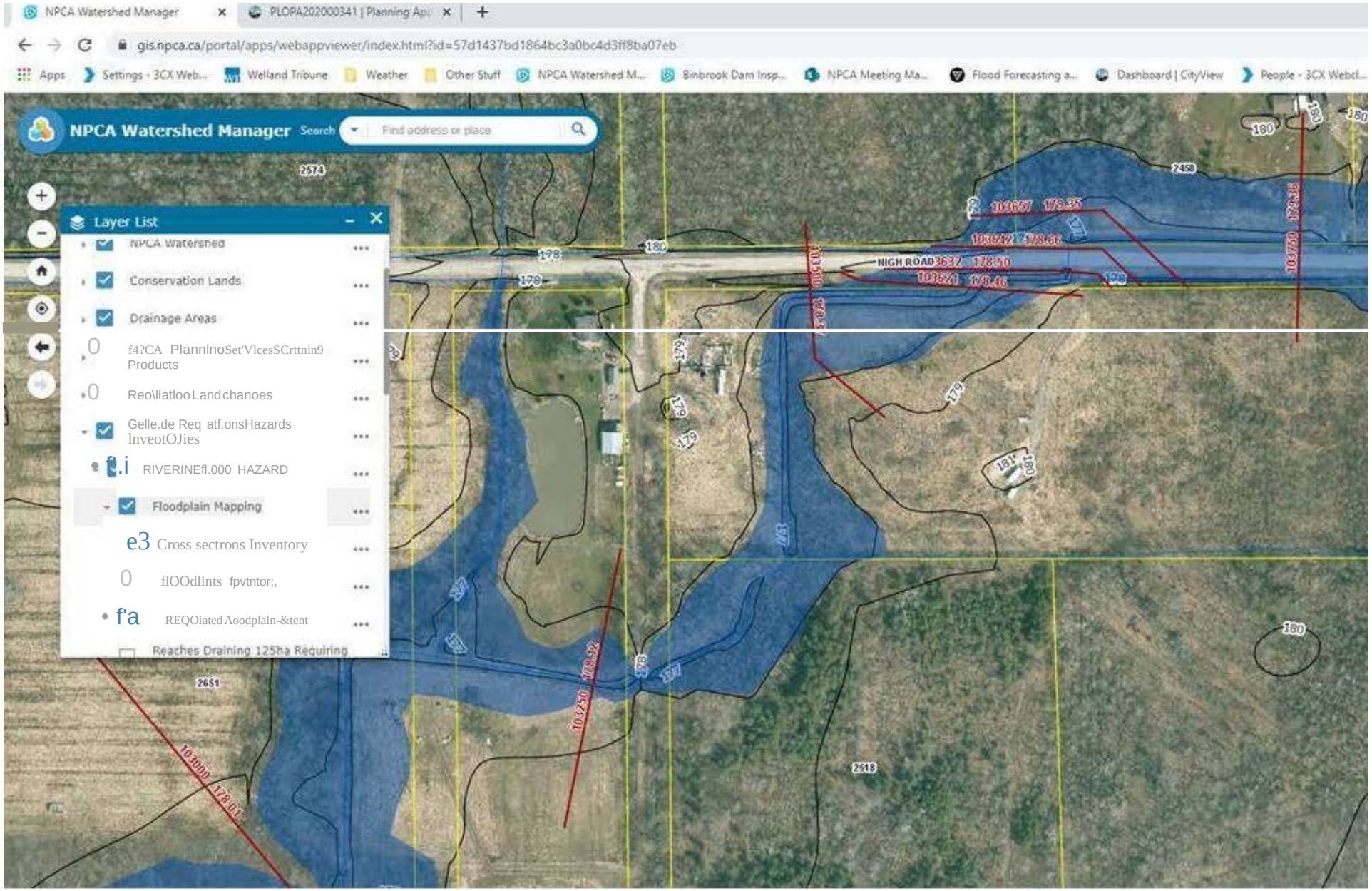
NPCA Watershed Manager
gis.npca.ca/portal/apps/webappviewer/index.html?id=57d1437bd1864bc3a0bc4d3ff8ba07eb
NPCA Watershed Manager
Search
Find address or place
Layer List
NPCA Watershed
Conservation Lands
Drainage Areas
Products
Floodplain Mapping
Cross sectrons Inventory
REQOiated Aoodplaln-&tent
Reaches Draining 125ha Requiring
HIGH ROAD
2574
2651
2918

APPENDIX "3"

Steve Miller, P.Eng.
Senior Manager, Water Resources
Niagara Peninsula Conservation Authority
250 Thorold Road West, 3rd Floor
Welland, Ontario. L3C 3W2
Tel: 905-788-3135 x 231
smiller@npca.ca
www.npca.ca

From: Cara Lampman <clampman@npca.ca>
Sent: May 6, 2020 8:10 AM
To: Steve Miller <smiller@npca.ca>
Subject: FW: Fwd: Request for Comments- Combined Official Plan and Zoning By-law Amendment Application - 0 Nigh Road

Hi Steve,

Please see the updated survey for the proposed lot creation on Nigh Road in Fort Erie and advise if it is sufficient. The related Cityview File is PLOPA202000341

Cara Lampman
Senior Watershed Planner
Niagara Peninsula Conservation Authority (NPCA)
250 Thorold Road West, 3rd Floor | Welland, ON L3C 3W2
Tel: 905-788-3135 | extension 272
clampman@npca.ca
www.npca.ca

Thank you for your email. Due to the COVID-19 pandemic, the NPCA has taken measures to protect staff and public while providing continuity of services. NPCA enforcement, permitting and planning functions are continuing to operate, however there may be delays in receiving responses to inquiries or complaints due to staff restrictions and remote work locations. Updates with regards to NPCA operations and activities can be found on our website at www.npca.ca/our-voice, the NPCA Facebook page at

APPENDIX "3"

RE: Fwd: Request for Comments- Combined Official Plan and Zoning By-law Amendment Application - 0 Nigh Road

Jessica Abrahamse to: Anamika Dilwaria 10/13/2020 03:55 PM

Cc: "David Deluce"

From: "Jessica Abrahamse" <jabrahamse@npca.ca>

To: "Anamika Dilwaria"<ADilwaria@forterie.ca>

Cc: "David Deluce" <ddeluce@npca.ca>

History: This message has been repliedto.

	Jason Pizzicarola	Jason Pizzicarola
	Cara Lampman	Cara Lampman
	Anamika Dilwaria	Anamika Dilwaria
	Cara Lampman	Cara Lampman
	Jason Pizzicarola	Jason Pizzicarola

Hi Anamika,

Upon internal discussion, the question of access of Nigh Road (for the new proposed lots) can be mitigated if the Town of Fort Erie is comfortable to take the responsibility for emergency access to the proposed subject lots. The below condition still holds for the changes requested to the grading plan.

Please let me know if you have any questions,

With Best Regards,

Jessica Abrahamse M.E.S.
Watershed Planner

250 Thorold Road West, 3rd Floor

Welland, On
L3C 3W2
(905) 788-3135 Ext. 235
jabrahamse@npca.ca
www.npca.ca
NPCA Mapping Tool

Thank you for your email. Due to the COVID-19 pandemic, the NPCA has taken measures to protect staff and public while providing continuity of services. NPCA enforcement, permitting and planning functions are continuing to operate, however there may be delays in receiving responses to inquiries or complaints due to staff restrictions and remote work locations. Updates with regards to NPCA operations and activities can be found on our website at www.npca.ca/our-voice, the NPCA Facebook page at https://www.facebook.com/NPCAOntario and on Twitter at https://twitter.com/NPCA_Ontario.

For more information on Permits, Planning and Forestry please go to the Permits & Planning webpage at https://npca.ca/administration/permits.

For mapping on features regulated by the NPCA please go to our GIS webpage at https://gis-npca-camaps.opendata.arcgis.com/ and utilize our Watershed Explorer App or GIS viewer.

To send NPCA staff information regarding a potential violation of Ontario Regulation 155/06 please go to the NPCA Enforcement and Compliance webpage at https://npca.ca/administration/enforcement-compliance.

From: Jessica Abrahamse
Sent: September 10, 2020 4:13 PM
To: Jason Pizzicarola <jp@jpdesign.ca>
Cc: Anamika Dilwaria <ADilwaria@forterie.ca>
Subject: RE: Fwd: Request for Comments- Combined Official Plan and Zoning By-law Amendment Application - 0 Nigh Road

Hi Jason,

Please find the following comments regarding the cut and fill:

The NPCA has reviewed the 'Review Letter of Lot Grading - Proposed Severance' (stamped Aug. 26, 2020) by Robert E. Dale Limited. The NPCA requires that the section locations referred to in the calculations be indicated on the grading plan. Please revise accordingly.
Also noted - Nigh Road is overtopped by the 100 year flood elevation of 179.35m. It appears that the road has more than 300mm of flooding across the entire frontage of Part 2 and most of Part 3. As such, it will also be required to be demonstrated that safe access can be provided pursuant to NPCA policies.

APPENDIX "3"

RE: Fwd: Request for Comments- Combined Official Plan and Zoning By-law Amendment Application - 0 Nigh Road

Jessica Abrahamse to: Anamika Dilwaria 12/10/2020 04:18 PM

From: "Jessica Abrahamse" <jabrahamse@npca.ca>
To: "Anamika Dilwaria"<ADilwaria@forterie.ca>

Jason Pizzicarola	Jason Pizzicarola
Anamika Dilwaria	
Cara Lampman	
Jason Pizzicarola	
Jessica Abrahamse	

Hi Anamika,

Please find the attached mapping of the subject property. Here is a description of the features on the subject property:

- A regulated watercourse part of Six Mile Creek and mapped floodplain 178.37m & 178.46m GSC are the elevations
- A Provincially Significant Wetland Buffer part of the Six Mile Creek Wetland Complex, however the NPCA can waive requirements for a work permit within this area as the road has fragmented and disturbed the buffer to the point that it is no longer required.
- A regulated watercourse and 15m buffer on either side towards the bottom portion of the lot

A 15m buffer on either side of each regulated watercourse is required, any works encroaching within 15m on either side will require a NPCA work permit. Let me know if you have any questions or require further information for your council meeting

With Best Regards,

Jessica Abrahamse M.E.S.
Watershed Planner

APPENDIX "3"

250 Thorold Road West, 3rd Floor
Welland, On
L3C 3W2
(905) 788-3135 Ext. 235
jabrahamse@npca.ca
www.npca.ca
NPCA Mapping Tool

Thank you for your email. Due to the COVID-19 pandemic, the NPCA has taken measures to protect staff and public while providing continuity of services. NPCA enforcement, permitting and planning functions are continuing to operate, however there may be delays in receiving responses to inquiries or complaints due to staff restrictions and remote work locations. Updates with regards to NPCA operations and activities can be found on our website at www.npca.ca/our-voice, the NPCA Facebook page at https://www.facebook.com/NPCAOntario and on Twitter at https://twitter.com/NPCA_Ontario.

For more information on Permits, Planning and Forestry please go to the Permits & Planning webpage at https://npca.ca/administration/permits.

For mapping on features regulated by the NPCA please go to our GIS webpage at https://gis-npca-camaps.opendata.arcgis.com/ and utilize our Watershed Explorer App or GIS viewer.

To send NPCA staff information regarding a potential violation of Ontario Regulation 155/06 please go to the NPCA Enforcement and Compliance webpage at https://npca.ca/administration/enforcement-compliance.

From: Anamika Dilwaria <ADilwaria@forterie.ca>
Sent: December-09-20 2:19 PM
To: Jessica Abrahamse <jabrahamse@npca.ca>
Subject: RE: Fwd: Request for Comments- Combined Official Plan and Zoning By-law Amendment Application - 0 Nigh Road
Importance: High

Hi Jessica,

Can we have a quick chat about Nigh Road property sometime today.

Thanks

Thanks,

Anamika Dilwaria, M.A, M.Pl., MCIP, RPP
Senior Development Planner, Planning and Development Services
The Corporation of the Town of Fort Erie

APPENDIX "3"

Re: OPA and ZBA Application - 0 Nigh Road - File No 350309-0471

Robert Kirk to: Anamika Dilwaria 10/28/2020 08:59 AM

From: Robert Kirk/FortErie
To: Anamika Dilwaria/FortErie@TownOfFortErie
History: This message has been replied to.

Robert Kirk

Robert Kirk

Robert Kirk

Robert Kirk

Anamika Dilwaria

ADilwaria@forterie.ca

Hey Anamika,

We can still access the property even if the road is flooded.

Thanks,
Robert

Anamika Dilwaria---10/27/2020 04:46:25 PM---Hi Robert and Jeremy, An application for a combined Official Plan and Zoning By-law application was

From: Anamika Dilwaria/FortErie
To: Robert Kirk/FortErie@TownOfFortErie, Jeremy Korevaar/FortErie@TownOfFortErie
Date: 10/27/2020 04:46 PM
Subject: OPA and ZBA Application - 0 Nigh Road - File No 350309-0471

APPENDIX "3"

Hi Robert and Jeremy,

An application for a combined Official Plan and Zoning By-law application was circulated for comments on April 20, 2020. The applicant was proposing to create two additional lots.

During the review process Niagara Peninsula Conservation Authority outlined in their comments that they would not be able to support the application as Nigh Road is overtopped by the 100 year flood elevation of 179.35m. It appears that the road has more than 300mm of flooding across the entire frontage of the proposed lots. As such, NPCA wanted to ensure that safe access can be provided pursuant to NPCA policies.

However, since then NPCA has revised their comments to mention that NPCA has no issue with the proposed OPA and ZBA application, if Town staff is comfortable to take the responsibility for emergency access to the proposed lots.

My question to you is - Can you confirm if Nigh Road is flooded emergency services can still access the subject property?

I have attached a copy of the site plan showing the proposed lot. It would be greatly appreciated if you can provide your comments by Friday, October 30, 2020

Thanks

Anamika Dilwaria, M.Pl., MCIP, RPP
Senior Development Planner, Planning and Development Services
The Corporation of the Town of Fort Erie
1 Municipal Centre Drive
Fort Erie, Ontario L2A 2S6
TEL: 1-905-871-1600 ext.2507
E-mail-adilwaria@forterie.ca

[attachment "19003_SK SKETCH.pdf" deleted by Robert Kirk/FortErie]

Niagara Region

Planning and Development Services
1815 Sir Isaac Brock Way, Thorold, ON L2V 4T7
905-980-6000 Toll-free:1-800-263-7215

Via Email Only

May 1, 2020

File No.: D.10.01. OPA-20-0008, D.18.01 ZA-20-0022

Ms. Anamika Dilwaria, MCIP, RPP
Senior Development Planner
Town of Fort Erie
1 Municipal Centre Drive
Fort Erie, ON L2A 2S6

Dear Ms. Dilwaria

Re: Regional and Provincial Comments
Official Plan and Zoning By-law Amendment
Applicant: Frank DiCorso
Agent: Jason Pizzicarola
0 Nigh Road, SS Nigh Road, East of Windmill Point Road
Town of Fort Erie

Regional Development Services staff has reviewed the information circulated for the subject applications. Currently, the lands are designated Rural and Environmental Protection. The lands are zoned Rural (RU), Environmental Conservation (EC) Overlay and Hazard (H). The Official Plan amendment is requested because the proposed lots do not comply with the definition of infill lots as outlined in the plan. The Zoning By-law amendment application is requested to add site-specific regulations to the existing RU zone to facilitate future severances to create two residential lots. The current Hazard (H) zone and Environmental Conservation (EC) Overlay Zone are to be maintained with no proposed changes.

A formal pre-consultation meeting was held for this application on May 24, 2018 at Fort Erie Town Hall. The application and associated fees were received on April 7, 2020. The following comments are provided from a Regional and Provincial perspective to assist the Town in considering this application.

Provincial and Regional Policies

The subject property is located outside of the Urban Area Boundary for the Town of Fort Erie, and within the Rural Area according to the Provincial Policy Statement (PPS). Provincial policy states that limited residential development may be directed to rural

lands provided the development is locally appropriate, does not adversely affect the viability of agricultural uses, is compatible with the rural landscape and can be sustained by rural services.

The 2019 Growth Plan for the Greater Golden Horseshoe (Growth Plan) states that Provincial mapping of the Agricultural System for the Greater Golden Horseshoe does not apply until it has been implemented in applicable upper-tier and single-tier Official Plans. Until that time, Prime Agricultural areas identified in upper- and single-tier Official Plans that were approved and in effect as of July 1, 2017 will be considered the agricultural land base for the purposes of this Plan. Provincial mapping of the Provincial Natural Heritage System for the Growth Plan does not apply until implemented in the applicable upper-tier and single-tier Official Plans. Until that time, Growth Plan Natural Heritage System policies apply outside settlement areas to the Natural Heritage Systems identified in Official Plans that were approved and in effect as of July 1, 2017.

The subject lands are designated Rural in the Regional Official Plan (ROP), which was approved prior to July 1, 2017. The predominant use of lands in the Rural Area is for agriculture. ROP policy allows for some non-farm development, including non-farm residential development, within the Rural Area that will be subject to detailed regulations by the area municipality. In order to mitigate the cumulative impact of continuous introduction of non-farm development outside settlement areas, the long-term pattern and character of future rural development is to be carefully considered. ROP policy stipulates that rural residential development is to retain desirable natural features and vegetation and may also make provision for the enhancement of the site. In addition, it must be suitable to the physical characteristics of the site and provide suitable soil and drainage conditions that will permit the proper siting of buildings and the supply of potable water and installation of long-term operation of sanitary waste disposal.

The proposed Official Plan and Zoning By-law amendment is to facilitate the future severance of two lots that generally meets the intent of Regional policy.

Core Natural Heritage System

The subject lands are mapped identifying Significant Woodlands and Fish Habitat as key natural heritage features and as such, the Growth Plan NHS policies apply. Growth Plan policies typically require the completion of a Natural Heritage Evaluation (NHE) when development (which includes lot creation) and/or site alteration is proposed within 120 metres (m) of key features. Regional policies similarly require the completion of an Environmental Impact Study (EIS) when development and/or site alteration is proposed within 50 m of Significant Woodland and 30 m of Fish Habitat.

The purpose of the NHE/EIS is to demonstrate:

- no negative impact on the key features or their ecological functions;
- maintain and where possible, enhance the connectivity between key features located within 240 m of each other;

- ensure that the disturbed area, including any buildings and structures, will not exceed 25% of the total developable area, and impervious surfaces will not exceed 10%; and
- where possible, avoid the removal of other natural features not identified as a key feature.

Growth Plan policies also require that the NHE/EIS establish a minimum 30 m Vegetation Protection Zone (VPZ) measured from the outside boundary of certain key features including woodlands and watercourses, that is to be maintained as natural, self-sustaining vegetation. Natural, self-sustaining vegetation is defined as "*vegetation dominated by native plant species that can grow and persist without direct human management, protection, or tending*". Development and/or site alteration is not permitted within key features or their VPZ.

Given the history of this application, Environmental Planning staff agreed to accept the submission of a Landscape Planting Plan, in lieu of the requirement for a NHE/EIS, to confirm the establishment of a 30 m VPZ along the southern edge of the subject lands (adjacent to the Significant Woodland). The Landscape Planting Plan was required to identify and illustrate the location of additional native trees, shrubs and/or groundcover that would be planted to establish the required 30 m VPZ. Alternatively, if there was a 30 m VPZ currently established that met the Growth Plan VPZ definition, Regional staff requested the submission of an assessment of the existing vegetation within the 30 m VPZ to confirm the intent of Growth Plan policies would be met.

Regional Environmental Planning staff have reviewed the Landscape Planting Plan prepared by Jamie Douglas Landscape Architecture, dated March 25, 2020, and are not satisfied that the establishment of the 30 m VPZ has been adequately addressed. Within the Landscape Notes included on the Plan, it states that "the existing vegetation is naturally progressing in growth stages from young saplings to older trees and will be allowed to migrate into the VPZ". Staff acknowledge that species may migrate into this area in the long term, but are not satisfied that there is sufficient native vegetation currently established within the VPZ. As such, an updated Landscape Planting Plan is requested for Regional review and approval, which may be submitted as part of future planning applications. It is noted that staff will specifically be looking for the updated Plan to identify and illustrate the location of additional native vegetation to be planted that complements the existing vegetation communities directly adjacent to the property. The updated Plan should include dense plantings to prevent invasive species from establishing and consider the use of thorny species to discourage human encroachment into the protection zone.

Environmental Planning staff offer no objections to the Official Plan and Zoning By-law amendments provided the 30 m VPZ is placed in an appropriately restrictive environmental zone, such as the Town's Environmental Conservation Overlay Zone.

Archaeology

The PPS and ROP provide direction for the conservation of significant cultural heritage and archaeological resources. Specifically, Section 2.6.2 of the PPS and Policy 10.C.2.1.13 of the ROP state that development and site alteration are not permitted on lands containing archaeological resources or areas of archaeological potential, unless significant archaeological resources have been conserved.

The subject land is identified as having high archaeological potential based on the Ministry of Heritage, Sport, Tourism and Culture Industries (MHSTCI) Criteria for Evaluating Archaeological Potential and the Town of Fort Erie's Archaeological Master Plan. A Stage 1-2 Archaeological Assessment prepared by Detritus Consulting Ltd., dated October 16, 2019, was submitted with the application. The Stage 2 Assessment resulted in the identification of no archaeological resources, and the Licensed Archaeologist recommends no additional archaeological assessment.

Regional Staff will require a copy of the acknowledgment letter confirming that all archaeological concerns have been addressed to the satisfaction of the Ministry of Heritage, Sport, Tourism and Culture Industries prior to passage of the amending by-law.

Servicing Comments

Niagara Region Private Sewage System staff has reviewed the documents submitted for the proposed applications. Staff note that the proposed lot configuration submitted with the applications reflects three parcels all greater than 1 ha in area with one of the parcels being 2.6 ha. Generally, Private Sewage System staff have no objection to the lot sizes proposed by the Official Plan and Zoning By-law amendments and note that more detailed comments will be provided through the future consent applications.

Conclusion

In conclusion, the proposed Zoning By-law Amendment generally aligns with the intent and direction of Provincial and Regional policies, subject to local requirements. Regional staff request that the 30 m VPZ be rezoned as Environmental Conservation Overlay and provided a copy of the acknowledgment letter from the Ministry of Heritage, Sport, Tourism and Culture Industries is received, Regional staff has no concerns with the application.

Should you have any questions concerning the above noted comments, or if you would like a hard copy of the comments, please do not hesitate to contact me at 905-980-6000 extension 3518 or by email at lola.emberson@niagararegion.ca. Please send notice of Council's decision on this application.

Respectfully,

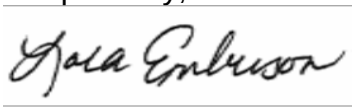

Lola Emberson, MCIP, RPP
Senior Development Planner

cc: Ms. S.Dunsmore, P.Eng., Manager of Development Engineering, Niagara Region
Mr. A. Butler, MCIP, RPP, Manager, Development Approvals, Fort Erie
Mr. A. Boudens, Senior Environmental Planner/Ecologist, Niagara Region

Mayor Redekop requested that staff bring the Applicant or Agent in to participate in the meeting.

Jason Pizzicarola, Agent, was present to speak on behalf of the Application.

Mr. Pizzicarola advised that he believes this is an excellent project for the downtown core as it will bring more density. He added that the more residential density there is, the more successful the area's businesses will be, that developing a seniors housing project is ideal in the downtown core. There are already several amenities; a doctor's office, coffee shop, restaurants, a bookstore, and a park. Mr. Pizzicarola added that increasing the development from 3 stories to 5 stories achieves many requirements in the Zoning By-law; the building will be situated at the front of the lot, not to see the parking, meets parking requirements, and does not create shadows.

Mayor Redekop enquired whether there were any members of the public in the waiting room who wish to speak in favour of the Application.

(a) Vince Salvatore, 31 Jarvis Street

Mr. Salvatore advised that he is a member of the Bridgeburg Business Improvement Area, and he supports the development. Mr. Salvatore noted that the development would be a vital asset to the area, help bring in other businesses, and encourage future growth.

Mayor Redekop enquired if any members of the public wished to speak in opposition to the Application or ask questions.

No members of the public came forward.

Mayor Redekop declared the Public Meeting closed.

(b) Proposed Official Plan & Zoning By-law Amendment

Re: 0-6489 Nigh Road - Owner - Frank Kenneth DiCorso - Agent - Jason Pizzicarola. The amendments are requested to facilitate a future severance to create two new residential lots. The property is currently designated Rural, in part, and Environmental Protection, in part, in the Official Plan, and zoned Rural (RU) Zone, in part, Environmental Conservation (EC) Overlay Zone, in part, and Hazard (H) Zone, in part. The site-specific RU regulations are requested for a reduction in the

minimum lot frontage and minimum lot area requirements of the by-law. The applicant is not proposing any changes to the Environmental Conservation (EC) Overlay Zone and Hazard (H) Zone.

Ms. Dilwaria, Senior Development Planner, delivered a PowerPoint Presentation which is available for viewing on the Town's website.

Ms. Dilwaria confirmed the statutory requirements for the Public Meeting were met, summarized the purpose of the Application, and public comments received.

Mayor Redekop requested that staff bring the Applicant or Agent in to participate in the meeting.

Jason Pizzicarola, Agent, was present to speak on behalf of the Application.

Mr. Pizzicarola advised that the property owner wishes to build a house for himself, closest to the creek, and then sever two parcels. Mr. Pizzicarola stated that there was a lot of work required for this proposal, including environmental impact studies, archaeological studies, and civil engineering.

Mayor Redekop enquired whether there were any members of the public in the waiting room who wish to speak in favour of the Application.

No members of the public came forward.

Mayor Redekop enquired if any members of the public wished to speak in opposition to the Application.

No members of the public came forward.

Mayor Redekop declared the Public Meeting closed.

7. Consent Agenda Items

(a) None.

8. Planning and Development Services

Chaired by Councillor Dubanow.

The Municipal Corporation of the Town of Fort Erie

By-law No. 15-2021

Being a By-law to Amend Zoning By-law No. 129-90
0-6489 Nigh Road
Jason Pizzicarola- Agent
Frank Kenneth DiCorso– Owner

350309-0471

Whereas an application was received from Jason Pizzicarola, (Agent) on behalf of Frank Kenneth DiCorso (Applicant) to amend the Town's Comprehensive Zoning By-law No. 129-90 as amended, for the lands described as 0-6489 Nigh Road, and

Whereas a Public Meeting pursuant to Section 34(12) of the *Planning Act*, R.S.O. 1990, c.P.13 was held on January 11, 2021, and

Whereas it is deemed desirable to amend the Comprehensive Zoning By-law No. 129-90 as amended, pursuant to the recommendations of Report No. PDS-02-2021 considered and approved at the Council-in-Committee meeting held on January 11, 2021;

Now therefore the Municipal Council of The Corporation of the Town of Fort Erie enacts as follows:

1. **That** Schedule "A" of By-law No. 129-90 as amended, is further amended by changing the zoning of the lands as described above and shown on the attached Appendix "1" from "Rural (RU) Zone", to "Rural RU (RU-656) Zone" (Part 1), "Rural RU (RU-657) Zone" (Parts 2 and 3) and "Environmental Conservation (EC) Overlay (EC-658) Zone" (Part 4).

2. **That** By-law No.129-90 as amended, is further amended by adding to "Section 8– Rural (RU) Zone" Subsection – "Exceptions to the Rural (RU) Zone" the following exceptions:

"RU-656 (15-2021) 0-6489 Nigh Road (Part 1)

These lands are zoned "Rural RU (RU-656) Zone" (Part 1), and all of the provisions of By-law No. 129-90 as amended that relate to lands zoned "Rural (RU) Zone" by this by-law shall apply to those lands zoned "Rural RU (RU-656) Zone" subject to the following special regulation:

a) Minimum Lot Area – 2.6 ha

RU-657 (15-2021) 0-6489 Nigh Road (Parts 2 and 3)

These lands are zoned "Rural RU (RU-657) Zone" (Parts 2 and 3), and all of the provisions of By-law No. 129-90 as amended that relate to lands zoned "Rural (RU) Zone" by this by-

law shall apply to those lands zoned "Rural RU (RU-657) Zone" shown as Part 2 on the attached Appendix "1" and shall be subject to the following special regulations:

a) Minimum Lot Frontage – 90 m
b) Minimum Lot Area – 1.1 ha"

3. **That** By-law No.129-90 as amended, is further amended by adding to "Section 35B– Environmental Conservation (EC) Zone" Subsection – "Exceptions to the Environmental Conservation (EC) Overlay Zone" the following exception:

"EC-658 (15-2021) 0-6489 Nigh Road (Part 4)

These lands are zoned Environmental Conservation (EC-658) Overlay Zone (Part 4), and all of the provisions of By-law 129-90 as amended that relate to lands zoned Environmental Conservation (EC) Overlay Zone by this by-law shall apply to those lands zoned Environmental Conservation (EC-658) Overlay Zone subject to the following special regulation:

(a) Notwithstanding the requirements of Subsection 35B.2 –Permitted Uses, the subject lands shall only be used for the conservation of plant and wildlife."

4. **That** the Clerk of the Town is authorized to effect any minor modifications, corrections or omissions solely of an administrative, numerical, grammatical, semantical or descriptive nature to this by-law or its schedules after the passage of this by-law.

Read a first, second and third time and finally passed this 22nd day of February, 2021.

_____
Mayor

_____
Clerk

I, Carol Schofield, Clerk, of The Corporation of the Town of Fort Erie certifies the foregoing to be a true copy of By-law No. 42-2019 of the said Town. Given under my hand and the seal of the said Corporation, this day of , 20

_____

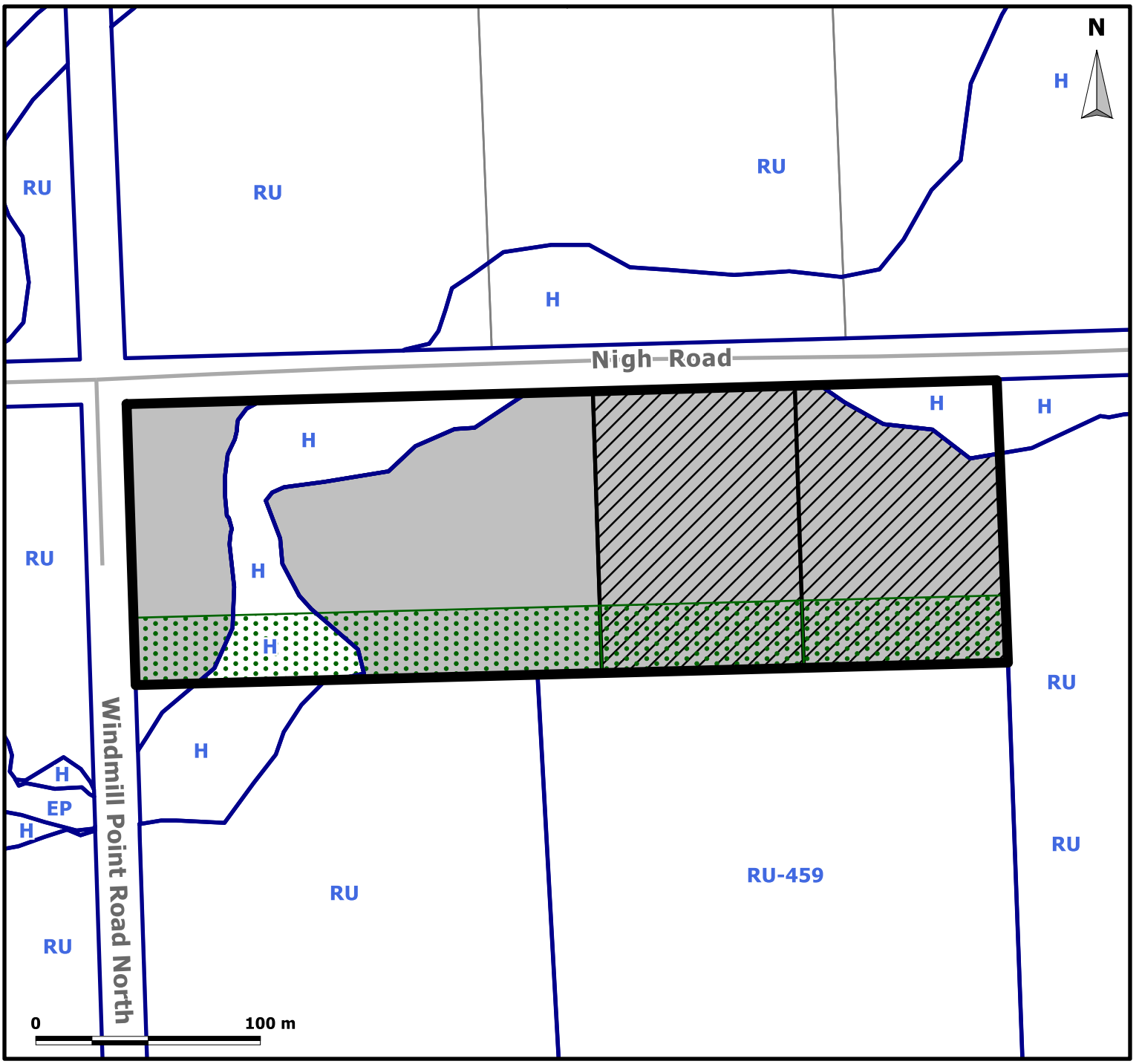

By-law No. 15-2021
THIS SKETCH FORMS PART OF SCHEDULE "A" TO BY-LAW NO. 129-90
PASSED THIS 22nd DAY OF FEBRUARY, 2021

Subject Lands - 0-6489 Nigh Road

Part 1 - Change from Rural RU Zone to Rural RU (RU-656) Zone

Parts 2 & 3 - Change from Rural RU Zone to Rural RU (RU-657) Zone

Part 4 - Environmental Conservation (EC) Overlay (EC-658) Zone

FORT ERIE ONTARIO
Our Focus: Your Future

Planning and Development Services
Map created December 21, 2020

CON 2 LEFT LOT 14 RP 59R6721 PARTS 1 TO 6

The Municipal Corporation of the Town of Fort Erie

By-law No. 16-2021

Being a By-law to Exempt Certain Lots in Plan 59M-438 from Part Lot Control, Block 57, 4116, 4120, 4124 and 4128 Village Creek Drive Park Lane Home Builders Limited (J. Hill)

File No. 350304

Whereas the Municipal Council of The Corporation of the Town of Fort Erie deems that the lands described in Section 1 of this By-law should be exempted from the provisions of Subsection 5 of Section 50 of the *Planning Act* since such lands are to be used for townhouse dwelling units as permitted by Zoning By-law No. 129-90 as amended;

Now therefore the Municipal Council of The Corporation of the Town of Fort Erie enacts as follows:

1. **That** the provisions of Subsection 5 of Section 50 of the *Planning Act, R.S.O. 1990, c.P.13* as amended shall not apply to the lands described as follows:

   (a) Block 57, Plan 59M-438; Fort Erie,
   being all of PIN 64175-0681 (LT),

   for the purpose of creating five (5) lots for residential development as follows:

   i) Part 1 on Reference Plan 59R-16865; and
   ii) Part 2 on Reference Plan 59R-16865; and
   iii) Part 3 on Reference Plan 59R-16865; and
   iv) Part 4 and Part 5 on Reference Plan 59R-16865.

2. **That** in accordance with Subsection 7.3 of Section 50 of the *Planning Act, R.S.O. 1990, c.P. 13* as amended, this By-law shall expire 2 years from the date of the registration of this by-law in the Land Registry Office at which time Subsection 5 of Section 50 of the *Planning Act R.S.O. 1990* shall apply to those lands in the registered plan described in Section 1 of this by-law.

3. **That** upon final passage of this by-law, the Town Law Clerk shall cause this By-law to be registered in the local Land Registry Office.

4. **That** the Clerk of the Town is authorized to effect any minor modifications, corrections or omissions, solely of an administrative, numerical, grammatical,

semantical or descriptive nature to this by-law or its schedules after the passage of this by-law.

Read a first, second and third time and finally passed this 22nd day of February 2021.

_____

Mayor

_____

Clerk

I, Carol Schofield, the Clerk of The Corporation of the Town of Fort Erie certifies the foregoing to be a true copy of By-law No. 16-2021 of the said Town. Given under my hand and the seal of the said Corporation this _____day of _____, 2021.

_____

Interoffice Memorandum

February 16, 2021
File No. 350304

To: Mayor and Council
From: Aaron Butler, Manager, Development Approvals,
Subject: Removal of Part Lot Control
By-Law No. 16-2021
Block 57, Plan 59M-438, 4116, 4120, 4124 and 4128 Village Creek Drive

Included in the Council package for February 22, 2021 is By-law No. 16-2021 exempting Parts 1 to 5, 59R-16865, Block 57, Plan 59M-438 from the Part Lot Control provisions of *The Planning Act*.

Attached is a copy of Registered Plan 59R-16865 indicating the proposed parts to be created for the future residential development on Parts 1 to 5. The current application will allow the conveyance of four lots for townhouse dwellings. Parts 1 to 5 are subject to registered easements.

The Planning Act also allows the Part Lot Control By-law to expire at the end of a specified time period. The purpose of the specified time period is to provide a time window to sell the lots and register the reference plan. In this case, a 2 year time frame is sufficient to allow the owner to complete the transactions necessary to convey the subject properties.

In order to permit the conveyance, staff recommends approval of By-law No. 16-2021 exempting Parts 1 to 5, 59R-16865, Block 57, Plan 59M-438 from Part Lot Control.

All of which is respectfully submitted,

Original Signed

Aaron Butler, MCIP, RPP
Manager, Development Approvals

Attachment: Appendix "1" – Registered Plan 59R-16865

cc: Tom Kuchyt, Chief Administrative Officer
Kira Dolch, Director of Planning and Development Services
Bonnie Critelli, Law Clerk
Carol Schofield, Town Clerk

PLAN OF SURVEY OF
BLOCK 57
PLAN 59M-438

TOWN OF FORT ERIE

REGIONAL MUNICIPALITY OF NIAGARA

SCALE 1 : 200

0 1 2 3 4 5 10 20 METRES

DONALD G. CHAMBERS
ONTARIO LAND SURVEYOR

I REQUIRE THIS PLAN TO BE DEPOSITED UNDER THE LAND TITLES ACT.

DATE JANUARY 8, 2021

DONALD G. CHAMBERS, B. Sc., O.L.S.

PLAN 59R-16865
RECEIVED AND DEPOSITED

DATE January 20, 2021

R. Lane
REPRESENTATIVE FOR LAND REGISTRAR FOR THE LAND TITLES DIVISION OF NIAGARA SOUTH(59)

SCHEDULE

PART	LOT	PLAN/CONCESSION	PIN
1	BLOCK 57	PLAN 59M-438	64175-0681(LT)
2			
3			
4			
5			

PARTS 1 TO 5: ALL OF PIN 64175-0681(LT)
PARTS 1 TO 5 SUBJECT TO EASEMENT AS IN SN498425
PART 5 SUBJECT TO EASEMENT AS IN SN521566

VILLAGE CREEK DRIVE
(BY PLAN 59M-438)
PIN 64175-0693(LT)

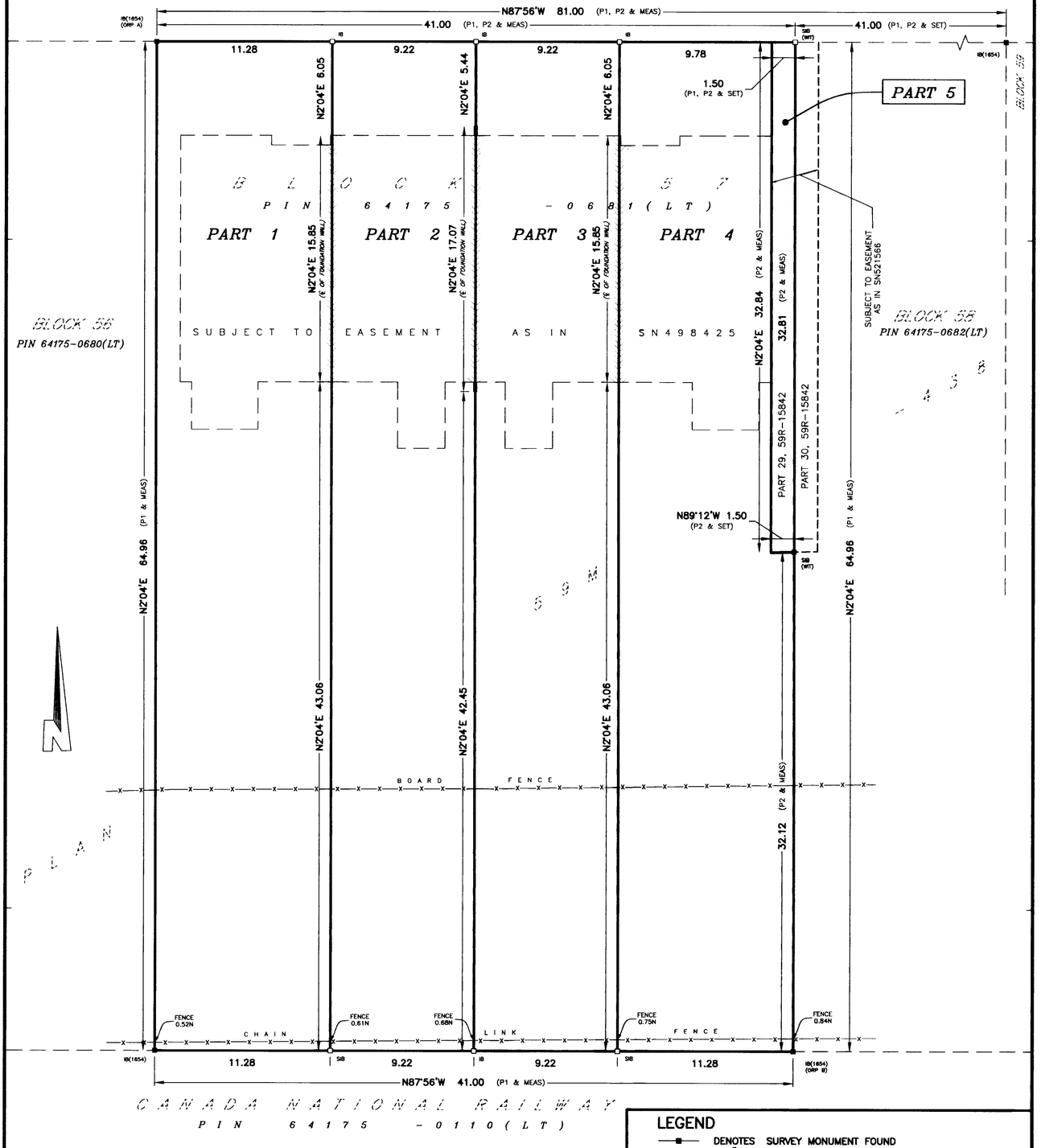

LEGEND

■	DENOTES	SURVEY MONUMENT FOUND
□	"	SURVEY MONUMENT SET
SIB	"	STANDARD IRON BAR
SSIB	"	SHORT STANDARD IRON BAR
IB	"	IRON BAR
MEAS	"	MEASURED
WIT	"	WITNESS
OU	"	ORIGIN UNKNOWN
N/S/E/W	"	NORTH/SOUTH/EAST/WEST
PIN	"	PROPERTY IDENTIFICATION NUMBER
P1	"	REGISTERED PLAN 59M-438
P2	"	DEPOSITED PLAN 59R-15842
1654	"	D. G. CHAMBERS, O.L.S.

METRIC NOTE

DISTANCES & COORDINATES SHOWN ON THIS PLAN ARE IN METRES AND CAN BE CONVERTED TO FEET BY DIVIDING BY 0.3048.

BEARING NOTE

BEARINGS ARE UTM GRID, DERIVED FROM OBSERVED REFERENCE POINTS A AND B BY REAL TIME NETWORK (RTN) OBSERVATIONS, UTM ZONE 17, NAD83 (CSRS) (2010.0)

DISTANCE NOTE

DISTANCES ARE GROUND AND CAN BE CONVERTED TO GRID BY MULTIPLYING BY THE COMBINED SCALE FACTOR OF 0.999906

OBSERVED REFERENCE POINTS (ORPs): UTM ZONE 17, NAD 83 (CSRS) (2010.0). CO-ORDINATES TO URBAN ACCURACY PER SEC. 14 (2) OF O.REG. 216/10

POINT ID	NORTHING	EASTING
A	4756179.77	657729.79
B	4756113.38	657768.41

CO-ORDINATES CANNOT, IN THEMSELVES, BE USED TO RE-ESTABLISH CORNERS OR BOUNDARIES SHOWN ON THIS PLAN.

SURVEYOR'S CERTIFICATE

I CERTIFY THAT:

1) THIS SURVEY AND PLAN ARE CORRECT AND IN ACCORDANCE WITH THE SURVEYS ACT, THE SURVEYORS ACT AND THE LAND TITLES ACT AND THE REGULATIONS MADE UNDER THEM;
2) THE SURVEY WAS COMPLETED ON THE 19th DAY OF NOVEMBER 2020.

JANUARY 8, 2021
DATE

DONALD G. CHAMBERS, B. Sc., O.L.S.

CHAMBERS AND ASSOCIATES SURVEYING LTD
12 THOROLD ROAD EAST
WELLAND ONTARIO
L3C 3T2
(905) 735-7841 / 735-7844
FAX (905) 735-7333
www.coal-surveying.com

DRAWN BY:	MSCAD:	DWG:	FILE No:
D M S	17010_57_MS	17010-57_RP	17-10-57

The Municipal Corporation of the Town of Fort Erie

By-law No. 17-2021

Being a By-law to Authorize the Execution of a Subdivision Agreement with Ashton Homes (Western) Limited (Aldo Vercillo) (Peace Bridge Village Phase 2 – Stages 1 and 2)

350308-0111

Whereas Report No. PDS-10-2021 was considered and approved at the Council-in-Committee meeting of February 8, 2021 to authorize the entry into a Subdivision Agreement for the Peace Bridge Village Phase 2 Subdivision – Stages 1 and 2 with Ashton Homes (Western) Limited; and

Whereas the Municipal Council of the Town of Fort Erie at its meeting of June 21, 2004 passed Resolution No. 25 to establish a practice whereby the Standard Form of Agreement would not be attached to the By-law and circulated to each Member of Council in advance of the particular Council Meeting, although Council has been informed under Report No. PDS-10-2021 of the Financial Schedule in the agreement, with the knowledge that the Clerk of the Town of Fort Erie is in possession of the full agreement at the subject Council Meeting; and

Whereas it is deemed desirable to enter into a Subdivision Agreement for the Peace Bridge Village Phase 2 Subdivision – Stages 1 and 2 (South of Regional Road 3 (Garrison Road), East side of Arthur Street) with Ashton Homes (Western) Limited in order to control the development of the lands described in Schedule “A” of the Subdivision Agreement attached hereto as Appendix “1” and forming part of this by-law;

Now therefore the Municipal Council of The Corporation of the Town of Fort Erie enacts as follows:

1. **That** the entry into a Subdivision Agreement with Ashton Homes (Western) Limited (the “Developer”), substantially in the form attached as Appendix “1” and forming part of this by-law, is authorized and approved, subject to the Developer first satisfying the provisions of the Agreement which are required to be satisfied prior to execution of the Agreement.

2. **That** subject to Section 1 of this by-law, the Mayor and Clerk are authorized and directed to execute the said Subdivision Agreement and affix the corporate seal thereto, and all other documentation necessary to effect the terms and conditions of the said Agreement.

3. **That** this by-law shall expire one (1) year from the date of passage should Ashton Homes (Western) Limited fail to enter into the Subdivision Agreement with the Town.

4. **That** the Clerk of the Town is authorized to effect any minor modifications, corrections, or omissions, solely of an administrative, numerical, grammatical, semantical or descriptive nature to this by-law or its schedules after the passage of this by-law.

Read a first, second and third time and finally passed this 22nd day of February, 2021.

_____
Mayor

_____
Clerk

I, Carol Schofield, the Clerk, of The Corporation of the Town of Fort Erie certifies the foregoing to be a true copy of By-law No. 17-2021 of the said Town. Given under my hand and the seal of the said Corporation, this
day of , 20__.

_____

The Municipal Corporation of the Town of Fort Erie

By-law No. 18-2021

Being a By-law to Authorize the Execution of a Subdivision Agreement with Park Lane Home Builders Limited (Debbie Hill) (Peace Bridge Village Phase 2 – Stage 3)

350308-0111

Whereas Report No. PDS-10-2021 was considered and approved at the Council-in-Committee meeting of February 8, 2021 to authorize the entry into a Subdivision Agreement for the Peace Bridge Village Phase 2 Subdivision – Stage 3 with Park Lane Home Builders Limited; and

Whereas the Municipal Council of the Town of Fort Erie at its meeting of June 21, 2004 passed Resolution No. 25 to establish a practice whereby the Standard Form of Agreement would not be attached to the By-law and circulated to each Member of Council in advance of the particular Council Meeting, although Council has been informed under Report No. PDS-10-2021 of the Financial Schedule in the agreement, with the knowledge that the Clerk of the Town of Fort Erie is in possession of the full agreement at the subject Council Meeting; and

Whereas it is deemed desirable to enter into a Subdivision Agreement for the Peace Bridge Village Phase 2 Subdivision – Stage 3 (South of Regional Road 3 (Garrison Road), East side of Arthur Street) with Park Lane Home Builders Limited in order to control the development of the lands described in Schedule "A" of the Subdivision Agreement attached hereto as Appendix "1" and forming part of this by-law;

Now therefore the Municipal Council of The Corporation of the Town of Fort Erie enacts as follows:

1. **That** the entry into a Subdivision Agreement with Park Lane Home Builders Limited (the "Developer"), substantially in the form attached as Appendix "1" and forming part of this by-law, is authorized and approved, subject to the Developer first satisfying the provisions of the Agreement which are required to be satisfied prior to execution of the Agreement.

2. **That** subject to Section 1 of this by-law, the Mayor and Clerk are authorized and directed to execute the said Subdivision Agreement and affix the corporate seal thereto, and all other documentation necessary to effect the terms and conditions of the said Agreement.

3. **That** this by-law shall expire one (1) year from the date of passage should Park Lane Home Builders Limited fail to enter into the Subdivision Agreement with the Town.

4. **That** the Clerk of the Town is authorized to effect any minor modifications, corrections, or omissions, solely of an administrative, numerical, grammatical, semantical or descriptive nature to this by-law or its schedules after the passage of this by-law.

Read a first, second and third time and finally passed this 22nd day of February, 2021.

_____
Mayor

_____
Clerk

I, Carol Schofield, the Clerk, of The Corporation of the Town of Fort Erie certifies the foregoing to be a true copy of By-law No. 18-2021 of the said Town. Given under my hand and the seal of the said Corporation, this
day of , 20__.

_____

The Municipal Corporation of the Town of Fort Erie

By-law No. 19-2021

Being a By-law to Authorize the Execution of an Assumption Agreement for the Hagey Avenue Condominium with 1703385 Ontario Inc. (John Maletta) and Niagara South Standard Condominium Corporation No. 162 (John Maletta)

File No. 350303-0004

Whereas Report No. PDS-02-2020 was considered and approved at the Council-in-Committee meeting of February 10, 2020 to authorize the entry into an Assumption Agreement with 1703385 Ontario Inc. and the new condominium corporation resulting from the split of the property; and

Whereas 1703385 Ontario Inc. has provided an undertaking confirming that the existing condominium agreement will remain in place; and

Whereas 1703385 Ontario Inc. has paid the necessary fee for the Assumption Agreement; and

Whereas Planning and Development Services staff have issued an exemption certificate pursuant to Subsection 9 (7) of the Condominium Act, 1998, dated November 30, 2020; and

Whereas it is deemed desirable to enter into an Assumption Agreement for the Hagey Avenue Condominium with Niagara South Standard Condominium Corporation No. 162 and 1703385 Ontario Inc. in order to control the development of lands as described in Schedule "A" of the Assumption Agreement which is attached hereto as Appendix “1” and forms part of this By-law; and

Now therefore the Municipal Council of The Corporation of the Town of Fort Erie enacts as follows:

1. **That** the entry into an Assumption Agreement with Niagara South Standard Condominium Corporation No. 162 and 1703385 Ontario Inc., substantially in the form attached as Appendix “1” and forming part of this by-law, is authorized and approved, subject to Niagara South Standard Condominium Corporation No. 162 and 1703385 Ontario Inc. first satisfying the provisions of the Agreement which are required to be satisfied prior to execution of the Agreement.

2. **That** subject to Section 1 of this by-law, the Mayor and Clerk are authorized and directed to execute the said Assumption Agreement and affix the corporate seal thereto, and all other documentation necessary to effect the terms and conditions of the said Agreement.

3. **That** the Clerk of the Town is authorized to effect any minor modifications, corrections, or omissions, solely of an administrative, numerical, grammatical, semantical or descriptive nature to this by-law or its schedules after the passage of this by-law.

Read a first, second and third time and finally passed this 22nd day of February, 2021.

_____
Mayor

_____
Clerk

I, Carol Schofield, the Clerk, of The Corporation of the Town of Fort Erie certifies the foregoing to be a true copy of By-law No. 19-2021 of the said Town. Given under my hand and the seal of the said Corporation, this
day of , 20__.

_____

The Municipal Corporation of the Town of Fort Erie

By-law No. 20-2021

Being a By-law to Authorize the Execution of an Assumption Agreement for the Bertie Street Condominium with 1703385 Ontario Inc. (John Maletta) and Niagara South Standard Condominium Corporation No. 163 (John Maletta)

File No. 350303-0004

Whereas Report No. PDS-02-2020 was considered and approved at the Council-in-Committee meeting of February 10, 2020 to authorize the entry into an Assumption Agreement with 1703385 Ontario Inc. and the new condominium corporation resulting from the split of the property; and

Whereas 1703385 Ontario Inc. has provided an undertaking confirming that the existing condominium agreement will remain in place; and

Whereas 1703385 Ontario Inc. has paid the necessary fee for the Assumption Agreement; and

Whereas Planning and Development Services staff have issued an exemption certificate pursuant to Subsection 9 (7) of the Condominium Act, 1998, dated November 30, 2020; and

Whereas it is deemed desirable to enter into an Assumption Agreement for the Bertie Street Condominium with Niagara South Standard Condominium Corporation No. 163 and 1703385 Ontario Inc. in order to control the development of lands as described in Schedule "A" of the Assumption Agreement which is attached hereto as Appendix “1” and forms part of this By-law; and

Now therefore the Municipal Council of The Corporation of the Town of Fort Erie enacts as follows:

1. **That** the entry into an Assumption Agreement with Niagara South Standard Condominium Corporation No. 163 and 1703385 Ontario Inc., substantially in the form attached as Appendix “1” and forming part of this by-law, is authorized and approved, subject to Niagara South Standard Condominium Corporation No. 163 and 1703385 Ontario Inc. first satisfying the provisions of the Agreement which are required to be satisfied prior to execution of the Agreement.

2. **That** subject to Section 1 of this by-law, the Mayor and Clerk are authorized and directed to execute the said Assumption Agreement and affix the corporate seal thereto, and all other documentation necessary to effect the terms and conditions of the said Agreement.

3. **That** the Clerk of the Town is authorized to effect any minor modifications, corrections, or omissions, solely of an administrative, numerical, grammatical, semantical or descriptive nature to this by-law or its schedules after the passage of this by-law.

Read a first, second and third time and finally passed this 22nd day of February, 2021.

_____
Mayor

_____
Clerk

I, Carol Schofield, the Clerk, of The Corporation of the Town of Fort Erie certifies the foregoing to be a true copy of By-law No. 20-2021 of the said Town. Given under my hand and the seal of the said Corporation, this
day of , 20__.

_____

The Municipal Corporation of the Town of Fort Erie

By-law No. 21-2021

Being a By-law to Amend Fees and Charges By-law No. 40-09, as amended (Building Permit Fees and Short Term Rental Licence Fees)

Whereas By-law No. 40-09, as amended, was passed by Council on March 9, 2009, to establish fees and charges for various services provided by the Town of Fort Erie; and

Whereas Report No. PDS-09-2021 was considered and approved at the Regular Council meeting held on January 18, 2021, to authorize the adjustment of building permit fees following a Public Meeting; and

Whereas pursuant to Section 7 of the *Building Code Act,* notice of a public meeting with respect to the proposed building permit fees was published in The Fort Erie Post on December 17, 2020; and

Whereas a public meeting was held on January 18, 2021, and no objections were received or presented to Council; and

Whereas Report No. PDS-08-2021 was considered and approved, as amended, at the Regular Council meeting held on January 18, 2021, with respect to short term rentals, including an increase to short term rental licence fees for the next two years; and

Whereas it is deemed expedient to further amend Fees & Charges By-law No. 40-09, to adjust building permit and short term rental licence fees;

Now therefore the Municipal Council of The Corporation of theTown of Fort Erie enacts as follows:

1. **That** the following Schedules to By-law No. 40-09, as amended, are repealed:

Community & Development Services

Schedule "PDS-A" Building Permit Fees & Charges
Schedule "PDS-F" Sign Permits
Schedule "PDS-D" Plumbing Fees
Schedule "CS-A" Business Licensing Fees

and replaced with the Schedules attached hereto as Schedule "A", and the fees and charges contained therein are established, authorized and approved effective upon passage of this by-law.

2. **That** the Clerk of the Town is authorized to effect any minor modifications, corrections or omissions solely of an administrative, numerical, grammatical, semantical or descriptive nature to this by-law or its schedules after the passage of this by-law.

Read a first, second and third time and finally passed this 22nd day of February, 2021.

_____

Mayor

_____

Clerk

I, Carol Schofield, the Clerk, of The Corporation of the Town of Fort Erie certifies the foregoing to be a true copy of By-law No. 21-2021 of the said Town. Given under my hand and the seal of the said Corporation, this day of , 20

_____

Schedule "A" to By-law No. 21-2021

SCHEDULE "PDS-A"

to By-law 40-09

PLANNING & DEVELOPMENT SERVICES

Building Permit Fees & Charges

The *Building Code Act, 1992* S.O. 1992, c.23, as amended, provides municipalities with authority to establish and impose fees and charges.

The following fees shall NOT be adjusted annually based on the Statistics Canada, *Consumer Price Index (CPI).*

Building Classifications and Fee Charges	Building Permit Fees	
	Cost (per square foot)	Flat Rate
Group A Assembly Occupancy		
School, church, restaurant, daycare, hall, transit, recreation facility	**$1.77**	
Owner/Leasehold renovation	**$0.89**	
Group B Institutional Occupancy		
Hospital, retention facility, nursing home, etc.	**$1.94**	
Owner/Leasehold renovation	**$1.02**	
Group C Residential Occupancy		
One family, semi-detached, multiple unit dwelling, hotel, motel, etc.	**$1.33**	
Group D Business/Personal Services Occupancy		
Office, bank, medical office, etc.	**$1.62**	
Owner/Leasehold renovation	**$0.84**	
Group E Mercantile Occupancy		
Store, shopping mall, plaza, shop, market, retail, etc.	**$1.49**	
Owner/Leasehold renovation	**$0.68**	
Group F Industrial Occupancy		
Industrial mall, shop, etc.	**$1.11**	
Industrial building with no partitions	**$0.68**	
Owner/Leasehold renovation	**$0.68**	
Special Categories/Occupancy		
Farm building, greenhouse	**$0.33**	
Air supported structure	**$0.18**	
Tent, temporary fabric structure		**$164.00**
Multiple tents, same property		**$327.00**
Miscellaneous Residential		
Garage, carport, covered deck/porch	**$0.44**	
Uncovered deck/porch, shed/accessory building	**$0.44**	
Sunroom/solarium	**$0.85**	

Alteration - Group C Residential		
Unfinished basement (new foundation and crawl space)	**$0.44**	
Roof structure (replace roof or add new roof)	**$0.18**	
Gut renovation	**$0.90**	
Interior alteration	**$0.54**	
Finished basement	**$0.70**	
Fireplace, woodstove		**$161.00**
Demolition		
Building less than 3,000 sq.ft.		**$161.00**
Other demolition	**$0.07**	
Pool		
Public pool		**$503.00**
Inground pool		**$189.00**
Above ground pool		**$161.00**
Change of Use		
Change of use of a building or part thereof where no construction required.		**$161.00**
Occupancy		
Authorize occupancy of an unfinished building or part thereof		**$196.00**
Transfer		
Transfer of permit to new owner		**$161.00**
Designated Structure		
Retaining wall, pedestrian bridge, crane, runway:		
Greater of:		
Per $1000 construction value		**$ 14.85**
OR Minimum Permit Fee		**$161.00**
Other designated structure		**$161.00**
Special Request		
Preliminary site inspection prior to application		**$219.00**
Non-routine inspections after hours		**$219.00**
Miscellaneous Permit		
Moving (Relocation of Building)		**$161.00**
Gasoline/Oil Storage Tank/Fuel Pump		**$161.00**
Other (Any other Permit not categorized) (per $1000 construction value)		**$ 14.85**
Minimum Permit Fee		**$161.00**
3rd Party Plans Review and Inspections Note: Actual costs, including applicable HST, incurred by the Town will be invoiced		**Actual Cost**
Alternative Solutions – Per Building Code		
Town Reviewed – per hr (4 hours minimum)	**$103.00**	
3rd Party review cost (subject to CBO's discretion)		**Actual Cost**
Note: Actual costs, including applicable HST, incurred by the Town will be invoiced.		

After Hours Service (Dedicated Processing of Permit After Regular Work Hours) Single Family Dwelling (New, Renovations or additions) Minor Projects (wherein Minimum Permit Fee applies) All other Projects		 **$531.00** **$266.00** **$798.00**
Re-inspection when previous inspection not remedied		**$ 81.50**
Revision or Amendment to a Permit (cost per hour)		**$ 81.50**
Compliance Letter - not associated with a permit (per property)		**$ 81.50**
Demolition and Build Agreement (includes registration fee)		**$811.00**
Conditional Building Permit Agreement (includes registration fee)		**$811.00**
Spatial Separation Agreement (includes registration fee)		**$581.00**
Release of Building related Agreements (includes registration fee)		**$319.00**

REFUND OF FEES	
Status of Permit Application	**Eligible for Refund**
• Application filed. No processing or review of plans or documents submitted.	**80%**
• Application filed. Plans reviewed.	**60%**
• Permit Issued.	**40%**
• Additional Deduction for each field inspection performed.	**10%**
• Permit valued at the minimum permit fee.	**0%**

Where construction has commenced prior to the issuance of a building permit, the application will be subject to an additional fee equal to the permit fee for the construction completed.

If the work regulated by the permit cannot be described otherwise, the permit application fee shall be $14.85 for each $1,000 of estimated value of construction. The estimated value of construction shall be determined by the Chief Building Official.

The dwelling square foot (*) rate does not include any covered porches, decks or attached garages. They shall be charged separately at their current rate.

* square foot is the gross area of all floors above grade measured from the outer face of exterior walls, unless noted otherwise. Mezzanines, lofts and habitable attics are included. Where there is no floor or exterior walls for the project, square foot is the greatest horizontal area of the structure. There are no deductions from the gross floor area for openings such as stairs, elevators, shafts, etc.

SCHEDULE "PDS-D"

to By-law 40-09

PLANNING & DEVELOPMENT SERVICES

PLUMBING FEES

The *Building Code Act,* S.O. 1992, c.23, as amended, provides municipalities with authority to establish and impose fees and charges.

The following fees shall NOT be adjusted annually based on the Statistics Canada, *Consumer Price Index* (CPI).

Plumbing, Drain & Sewer Permit

i. Single Family Dwelling	Flat rate **$89.00** plus applicable fees for storm building sewer, sanitary building sewer and waterline.
ii. Semi-Detached, Row House or other multiple residential where each individual unit has its own separate service.	Flat rate **$89.00** per unit plus applicable fees for storm building sewer, sanitary building sewer and waterline.
iii. Multiple Dwelling and Apartment, Motel and any other residential unit which is served by a single service.	Flat rate **$58.00** per unit plus applicable fees for storm building sewer, sanitary building sewer, waterline and internal storm leader.
iv. Commercial, Industrial, Government, Institutional and any other building or structure not specifically provided for above.	**$119.00** fee plus additional **$6.00** per fixture plus applicable fees for storm building sewer, sanitary building sewer, waterline, internal rainwater leader.

Permit Fee for New:

Storm Building Sewer – first 10m	**$49.00**
Sanitary Building Sewer – first 10m	**$49.00**
Waterline/Service – first 10m	**$49.00**
Sewer and water main installations over 10m Each additional metre	**$3.05**
Internal Rain Water Leader	**$22.00**
Manhole or Catch Basin	**$22.00**

Private Surface Water Collection System for parking area or surrounding grounds.	Flat rate **$49.00** plus applicable manhole and catch basin fee.
Permit Fee for alteration, relocation or extension of existing plumbing.	**$49.00** plus applicable fee for storm building sewer, sanitary building sewer, waterline.
Re-inspection Fee due to faulty or defective work or due to work not being ready for inspection.	**$81.00** for each call back.

Schedule "A" to By-law No. 21-2021

Schedule "PDS-D" Page 2

The following fees shall be adjusted annually based on the Statistics Canada, *Consumer Price Index* (CPI).

Fees for Connection to Watermain, Sanitary Sewer or Storm Sewer

a) Road Trench Cut Final Reinstatement Fees per Metre of Road Trench Cut – Applicable to all connection permits

Table 1	Single Lot		Two Lots Side by Side
Road Surface	**Single Service**	**Double Service**	**Two Double Service Trench**
Surface Treated	**$ 73.60**	**$ 107.70**	**$ 188.40**
Hot Mix Asphalt	**$ 125.80**	**$ 187.90**	**$ 328.80**

Example: Fee to reinstate trench cut from installation of watermain and sanitary sewer connections across a 6.5m wide asphalt road: 6.5m x $187.90/m = $1,221.35

b) Watermain Commissioning of Site Servicing for Extensions/Replacements

Up to 200 metres long	**$2,865.00** (flat rate)
Greater than 200 metres	Flat Rate as above for first 200 metres Plus **$2.03** per metre thereafter

Example: 300 metres in length would be charged $2,865.00 flat rate for first 200 metres plus $2.03 per metre for additional 100 metres ($2,865.00 + $203.00 = $3,068.00)

c) Water, Sanitary Sewer and Storm Sewer Service Connection Asphalt Cut of New Pavements

Roads with new Asphalt Overlay (within 5 years)	**$ 639.00**
Newly Reconstructed Roads (within 5 years)	**$1,277.00**

Fees set out in Sections a), b), and c) above shall be paid prior to permit approval.

SCHEDULE "PDS-F"
to By-law No. 40-09

PLANNING & DEVELOPMENT SERVICES

SIGN PERMITS

The *Municipal Act, 2001,* S.O. 2001, c.25, as amended, provides municipalities with authority to establish and impose fees and charges.

The following fees shall be adjusted annually based on the Statistics Canada *Consumer Price Index* (CPI).

Category	Fee
Portable Sign Permit Fee	**$119.00**
Permit Fee (per square metre)	**$21.31 per square metre or part thereof ($1.98 per square foot)**
Minimum Sign Permit Fee	**$119.00**
Sign Permit Renewal Fee	**$83.00**
Sign Encroachment Permit Fee	**$169.00**
Sign Removal Fee	**$139.00**
Return of Removed Sign Fee	**$139 (plus associated storage costs)**
Minor Variance Application from Sign By-law Fee	**$465.00**
Appeal of Minor Variance Decision Fee	**$465.00**

Schedule "A" to By-law No. 21-2021

SCHEDULE "CS-A"

to By-law 40-09

CUSTOMER SERVICES

Business Licensing Fees

The *Municipal Act, 2001,* S.O. 2001, c.25, as amended, provides municipalities with authority to establish and impose fees and charges.

The following fees shall be adjusted annually based on the Statistics Canada *Consumer Price Index* (CPI).

TYPE OF BUSINESS		FEE
New Business		**$153.00**
Amusement Arcade		**$172.00**
Auctioneer		**$ 77.00**
Bed and Breakfast Establishment	Bi-annual non-refundable licence fee shall expire on the 31st day of December in the following year in which the licence was issued.	**$184.00**
Short Term Rental	Properties owned by Corporations	**$500.00**
	Properties owned by Individuals	**First licence $300.00**
		Second licence $400.00
		Third (or more) licence $500.00
Bill Distributors		**$466.00**
Hawkers and Pedlar	Class 1 – Door to Door Sales	**$ 77.00**
	Class 2-1 – Temporary Sales	**$ 98.00**
	Class 2-2 – Fireworks	**$139.00**
	Class 3 – Multi Vendor	**$ 77.00**
	Class 4 – General	**$ 77.00**
Pawn Broker		**$ 77.00**
Refreshment Vehicle (per vehicle operated by any one owner)		**$179.00**
Refreshment Cart (per cart operated by any one owner)		**$159.00**
Refreshment Cycle (per cycle operated by any one owner)		**$159.00**
Residential Emergency Hostel		**$190.00**
Restaurant and Fresh Food Establishment		**$145.00**

Second Level Lodging Home	**$190.00**
Late Payment Charge (shall be added to the licence fee for those renewal applications received after January 31st in the current licence year)	**$ 25.00**

The Municipal Corporation of the Town of Fort Erie

By-law No. 22-2021

Being a By-law to amend Business Licensing By-law No. 217-05, as amended (Short Term Rentals)

Whereas By-law No. 217-05, as amended, was passed by the Municipal Council of the Town of Fort Erie on December 12, 2005, to licence and regulate various business in the Town of Fort Erie and to repeal certain by-laws; and

Whereas Council approved Report No. PDS-08-2021, as amended, with respect to short term rentals, including an increase to the penalty for operating a short term rental without a licence to $600; and

Whereas it is deemed desirable to repeal and replace Appendix "1" to Schedule 13 of By-law No. 217-05, as amended;

Now therefore the Municipal Council of The Corporation of the Town of Fort Erie enacts as follows:

1. **That** Appendix “1” to Schedule 13 to By-law No. 217-05, as amended, is repealed and replaced with Schedule “A” attached to and forming part of this by-law.

2. **That** the Clerk of the Town is authorized to effect any minor modifications, corrections or omissions, solely of an administrative, numerical, grammatical, semantical or descriptive nature to this by-law or its schedules after the passage of this by-law.

Read a first, second, and third time and finally passed this 22nd day of February, 2021.

_____
Mayor

_____
Clerk

I, Carol Schofield, the Clerk of The Corporation of the Town of Fort Erie, certify the foregoing to be a true copy of By-law No. 22-2021 of the said Town. Given under my hand and the seal of the said Corporation, this day of , 20 .

_____

Schedule "A" to By-law No. 22-2021

By-law No. 217-05

APPENDIX "1" TO SCHEDULE 13

PENALTIES			
Column 1	**Column 2**	**Column 3**	**Column 4**
Infraction	**Reference**	**Demerit Points**	**Administrative Penalties**
Failure to comply with Fire Protection & Prevention Act/Fire Code ("FPPA/Fire Code")	2.3	15	Fines Imposed under FPPA/Code
Failure to comply with Building Code Act ("BCA")	2.3	10	Fines Imposed under BCA
Obstruct Officer	5.1 (h)	10	$100.00
Operating without a licence	5.1 (a) and (b)	10	$600.00
Operating with an open Permit or Order	5.1 (n)	10	$300.00
Failure to Display Licence	5.1(e)	3	$75.00
Operating a short term rental without conforming to all applicable Federal, Provincial and Municipal laws	5.1(k)	5	$200.00
Non-availability of Local Contact Person	5.1(g)	5	$100.00
Noise and Nuisance	5.1(j)	5	Penalties Imposed under By-law No. 30-09
Not eligible to hold a licence	2.1	5	nil
Failure to have garbage in containers with lids	5.1(d)	3	$150.00
Failure to comply with Fire Safety Plan	5.1(i)	5	$200.00
Assignment of licence	5.1(m)	3	$50.00
Property Standards Infraction	5.1(n)	3	Fines imposed under By-law No. 186-08
Outside sleeping accommodations on site	5.1(f)	3	$100.00
Operating premises without full private or municipal services	5.1(c)	3	$100.00

Note: References to By-laws and Legislation include as they may be amended or replaced.

The Municipal Corporation of the Town of Fort Erie

By-law No. 23-2021

Being a By-law to Authorize the Entry into an Extension Agreement with 5017018 Ontario Inc. o/a Garrison Square Plaza (John Krzysz) (Units 1 & 2, 660 Garrison Road)

Whereas The Corporation of the Town of Fort Erie entered into an Assignment of Lease and Acknowledgement of Consent with the Fort Erie Economic Development & Tourism Corporation and 5017018 Ontario Inc. o/a Garrison Square Plaza (the "Landlord") on January 1, 2020, for Units 1 and 2, Garrison Square Plaza, 660 Garrison Road in Fort Erie, which terminated on July 31, 2020; and

Whereas the COVID-19 Pandemic stalled planned renovations to Town Hall that were necessary in order to bring the Economic Development and Tourism Services staff in-house; and

Whereas By-law No. 55-2020 was passed by the Municipal Council of The Corporation of the Town of Fort Erie on June 15, 2020 to authorize the entry into an Extension Agreement with the Landlord extending the term of the lease to November 30, 2020 ; and

Whereas the COVID-19 Pandemic continued and the necessary renovations to Town Hall remained on hold; and

Whereas Report No. CS-17-2020 was considered and approved at the Council-in-Committee Meeting held on October 13, 2020 to authorize the entry into a further Extension Agreement with the Landlord, extending the term of the lease to March 31, 2021; and

Whereas By-law No. 104-2020 was passed by the Municipal Council of The Corporation of the Town of Fort Erie on October 19, 2020 to authorize the entry into an Extension Agreement with the Landlord extending the term of the lease to March 31, 2021; and

Whereas the COVID-19 Pandemic has continued and the necessary renovations to Town Hall have not been fully completed and it is deemed desirable to enter into a further Extension Agreement with 5017018 Ontario Inc. o/a Garrison Square Plaza to extend the term of the Lease one month to April 30, 2021,

Now therefore the Municipal Council of The Corporation of theTown of Fort Erie enacts as follows:

1. **That** the entry into an Extension Agreement with 5017018 Ontario Inc. o/a Garrison Square Plaza commencing on April 1, 2021 and expiring on April 30, 2021, in a form satisfactory to the Chief Administrative Officer, is authorized and approved.

2. **That** the Mayor and Clerk are authorized and directed to execute the Extension Agreement and to affix the corporate seal thereto.

3. **That** the Clerk of the Town is authorized to effect any minor modifications, corrections or omissions, solely of an administrative, numerical, grammatical, semantical or descriptive nature to this by-law or its schedules after the passage of this by-law.

Read a first, second and third time and finally passed this 22nd day of February, 2021.

_____

Mayor

_____

Clerk

I, Carol Schofield, the Clerk, of The Corporation of the Town of Fort Erie certifies the foregoing to be a true copy of By-law No. 23-2021 of the said Town. Given under my hand and the seal of the said Corporation, this day of , 20

_____

Interoffice Memorandum

February 22, 2021

File No.120911

To: Mayor and Council
From: Bonnie Critelli, Law Clerk, Legal Services
Subject: **BY-LAW NO. 23-2021**
EXTENSION AGREEMENT WITH 5017018 ONTARIO INC. (JOHN KRZYSZ) o/a GARRISON SQUARE PLAZA (Units 1 & 2, 660 Garrison Road)

Included in the Council package for February 22, 2021 is By-Law No. 23-2021 to authorize the entry into an Extension Agreement with 5017018 Ontario Inc. o/a Garrison Square Plaza for the lease of Units 1 & 2, 660 Garrison Road.

On January 1, 2020, the Town assumed the lease of Units 1 & 2, 660 Garrison Road to continue to house the Economic Development and Tourism Services staff (EDTS) for the balance of the term, which ended on July 31, 2020. It was expected that the EDTS staff would move into Town Hall prior to the end of the term but as a result of the COVID-19 Pandemic, required renovations were stalled. As the COVID-19 Pandemic continued and the renovations could not be completed, the term of the lease was extended on two occasions and will now terminate on March 31, 2021.

While it is expected that the Town will have the necessary renovations completed by March 31, 2021, as we are still in the midst of the COVID-19 Pandemic, some unforeseen delays may occur. Out of an abundance of caution and in order to ensure that the EDTS staff will have ample time to pack their offices and move into Town Hall, the Town and the Landlord have agreed to extend the term of the lease for one further month to April 30, 2021 at the same monthly fee and costs currently being paid and with the opportunity for the Town to further extend the lease if needed.

The terms of the Extension Agreement have been approved by the Landlord and Town staff.

All of which is respectfully submitted,

"Original Signed"

Bonnie Critelli
Law Clerk, Legal Services

Cc: Tom Kuchyt, Chief Administrative Officer
Carol Schofield, Clerk
Caralee Grummett, Manager, Economic Development and Tourism Services

The Municipal Corporation of the Town of Fort Erie

By-law No. 24-2021

Being a By-law to Authorize the Sale of Part of Lot 583, Plan 475 (0 Maple Avenue) to George Burgman and Raechal Eric

Whereas By-law No. 60-2017 establishes a policy for the sale of land owned by The Corporation of the Town of Fort Erie (the "Policy"); and

Whereas Report No. PDS-07-2021 was considered and approved at the Regular Council Meeting held on January 18, 2021, to authorize the sale of lands on the south side of Maple Avenue, for the appraised value of $7,900.00, plus HST, if applicable, to George Edward Burgman and Raechal Geneva Rose Eric, subject to the lands being required to merge with the purchasers' abutting lands; and

Whereas it is deemed desirable to enter into an Agreement of Purchase and Sale with George Edward Burgman and Raechal Geneva Rose Eric for the sale of the said property;

Now therefore the Municipal Council of The Corporation of theTown of Fort Erie enacts as follows:

1. **That** the entry into an Agreement of Purchase and Sale with George Edward Burgman and Raechal Geneva Rose Eric (the "purchasers") in the amount of $7,900.00 plus HST for the lands described as Lot 583, Plan 475, Bertie; Fort Erie, being all of PIN 64196-0015 (LT) in a form satisfactory to the Town Solicitor, is authorized and approved, subject to the lands merging in title with the purchasers' abutting property and the purchasers being responsible for all associated costs.

2. **That** the Town Solicitor, or her designate, is authorized and directed to execute the Agreement of Purchase and Sale and all other documentation necessary to complete the transaction, and to affix the corporate seal thereto.

3. **That** the proceeds from the sale shall be credited to the Major Capital Expenditure Reserve Fund of The Corporation of the Town of Fort Erie.

4. **That** this by-law shall expire one (1) year from the date of passage if the purchasers have not completed the transaction.

5. **That** the Clerk of the Town is authorized to effect any minor modifications, corrections or omissions, solely of an administrative, numerical, grammatical, semantical or descriptive nature to this by-law or its schedules after the passage of this by-law.

Read a first, second and third time and finally passed this 22nd day of February, 2021.

_____

Mayor

_____

Clerk

I, Carol Schofield, the Clerk, of The Corporation of the Town of Fort Erie certifies the foregoing to be a true copy of By-law No. 24-2021 of the said Town. Given under my hand and the seal of the said Corporation, this day of , 20

_____

The Municipal Corporation of the Town of Fort Erie

By-law No. 25-2021

Being a By-law to Confirm the Actions of Council its Council-in-Budget Committee Meeting No. 3 held February 3, 2021, Council-in-Committee Meeting held on February 8, 2021 and Council Meeting held on February 22, 2021

Whereas it is desirable to have the actions and proceedings of Council adopted, ratified and confirmed by by-law;

Now therefore the Municipal Council of The Corporation of the Town of Fort Erie enacts as follows:

1. That the actions of Council at its Council-in-Budget Committee Meeting No. 3 held February 3, 2021, Council-in-Committee Meeting held on February 8, 2021 and Council Meeting held on February 22, 2021including all motions, resolutions and other actions are adopted, ratified and confirmed as if they were expressly embodied in this by-law, except where the law requires the prior approval of the Ontario Municipal Board or other authority.

2. **That** where no individual by-law has been or is passed with respect to the taking of any action authorized in or with respect to the exercise of any powers by the Council, then this by-law is deemed for all purposes to be the by-law required for such authorization or exercise of any powers.

3. **That** the Mayor and officers of The Corporation of the Town of Fort Erie are authorized and directed to do all things necessary to give effect to such actions or to obtain approvals where required**.**

4. **That** except where otherwise provided, the Mayor and the Clerk are authorized and directed to execute all documents arising from such actions.

5. **That** the Clerk of the Town is authorized to effect any minor modifications, corrections or omissions, solely of an administrative, numerical, grammatical, semantical or descriptive nature to this by-law or its schedules after the passage of this by-law.

Read a first, second and third time and finally passed this 22nd day of February, 2021.

_____
Mayor

_____
Clerk

I, Carol Schofield, the Clerk, of The Corporation of the Town of Fort Erie certifies the foregoing to be a true copy of By-law No. 25-2021 of the said Town. Given under my hand and the seal of the said Corporation, this day of , 20 .

_____